B-X-19-1AE-1

PROJECT

Athens County Critical Infrastructure

Chauncey OH - Sanitary Sewer Facility Improvements

Athens **COUNTY COMMISSIONERS**

Charlie Adkins

Lenny Eliason

Chris Chmiel

COMPETITIVE SEALED BID DOCUMENTS PREPARED BY:

HOCKING ATHENS PERRY COMMUNITY ACTION AGENCY
3 Cardaras Dr.
P.O. BOX 220
Glouster, Ohio 45732
740.767.4500
1.800.686.1093

TABLE OF CONTENTS

SECTION A: NOTICE TO CONTRACTORS

- Notice to Contractors

SECTION B: INSTRUCTIONS TO BIDDERS

1. Receipt and Opening of Bids
2. Preparation of Bid
3. Telegraphic Modifications
4. Method of Bidding
5. Qualification of Bidder
6. Bid Security
7. Liquidated Damages for Failure to Enter into Contract
8. Conditions of Work
9. Obligation of Bidder
10. Examination of Site
11. Soil Conditions
12. Working Facilities
13. Addenda and Interpretations
14. Water Supply
15. Signature of Bidders
16. Notice of Special Conditions
17. Additional Obligations Upon Contract Award
18. Foreign Corporations and Contractors
19. Attachment A, "Qualitative and Responsible" Contractor Criteria

SECTION C: GENERAL CONTRACT CONDITIONS

Article 1 General Contract Documents
Article 2 Performance and Payment Bonds
Article 3 Wage Rates
Article 4 Affirmative Action
Article 5 Insurance
Article 6 Safety
Article 7 Permits
Article 8 Supervision
Article 9 Claims against the Contractor
Article 10 Subcontracting
Article 11 Change of Work
Article 12 Time
Article 13 Completion of Work
Article 14 Termination
Article 15 Payment

- Supplemental General Conditions

SECTION D: WORK SPECIFICATIONS

- Project Specifications
- Project Location Map

SECTION E: DAVIS-BACON WAGE DETERMINATIONS

SECTION F: BID FORMS

- Bid for Unit Price Contracts Signature Page
- Bid Guaranty and Contract Bond Signature Page
- Affidavit of Contractor/Supplier of Non-Delinquency of Personal Property Taxes
- Non-Collusion Affidavit
- Certification Regarding Debarment, Suspension, and Other Responsibility Matters Primary Covered Transactions
- Affidavit in Compliance with Section 3517.13 of ORC
- Additional Certifications
- Bonding and Insurance Requirements
- Experience Statement
- Ohio Sales and Use Tax Form
- Ohio DMA Form
- W-9 Form
- Ohio New Hire Form

TABLE OF CONTENTS

SECTION G: AGREEMENT FORMS

- Certifications - Performance and Payment Bond
- Notice of Award
- Contract
- Notice to Proceed
- Notice of Commencement
- Change Order
- Certificate of Owner's Attorney
- Certificate of Owner's Financial Officer
- Conflict of Interest
    - Interest of Contractor and Employees
    - Records and Audits
    - Federal or State Officials Not to Benefit
- Special Conditions Pertaining to Hazards Safety Standards and Accident Prevention
    - Lead-Based Paint Hazards
    - Use of Explosives
    - Danger Signals and Safety Devices
- Special Equal Opportunity Provisions
    A. Activities and Contracts not Subject to Executive Order 11246, as Amended
    B. Executive Order 11246 (Contracts/Subcontracts over $10,000)
        - Goals for minority and Female Participation
    C. Notice of Requirement for Affirmative Action to Ensure Equal Employment Opportunity
    D. Standard Federal EEO Construction Contract Specifications
    E. Certification of Non-Segregated Facilities (over $10,000)
    F. Civil Rights Act of 1964
    G. Section 109 of the Housing and Community Development Act of 1974
    H. "SECTION 3" Compliance in the provision of Training, Employment and Business Opportunities
- Contractor, Section 3 Plan Format Signature Page
- Table A – Proposed Subcontracts Breakdown
- Table B – Estimated Project Workforce Breakdown
- Certification of Bidder Regarding Equal Employment Opportunity
- Certification of Subcontractor Regarding Equal Employment Opportunity
- Certification of Bidder Regarding Section 3 – Segregated Facilities
- Certification of Proposed Subcontractor Section 3 – Segregated Facilities
- Certification of Compliance with Air and Water Acts (Applicable to contracts exceeding $10,000)

SECTION H: FEDERAL LABOR STANDARDS PROVISIONS

- Certification of Compliance with Federal Labor Standards Provisions - Reprint of HUD-4010 (pp. 1 - 8) Revised July 2003
- Contractor's Certification: Concerning Labor Standards and Prevailing Wage Requirements
- Subcontractor's Certification: Concerning Labor Standards and Prevailing Wage Requirements

NOTICE TO CONTRACTORS

SECTION A

NOTICE TO CONTRACTORS

Sealed proposals for the Chauncey OH - Sanitary Sewer Facility Improvements project will be received at the office of the Athens **County Commissioners,** 15 South Court Street, Athens, OH 45701 until Tuesday, May 25th, 2021 @ 10:15am plans, specifications and bid forms may be secured by contacting the Community Development Division at the office of Hocking Athens Perry Community Action, 3 Cardaras Dr., Glouster, OH 45732, (740)-767-4500, for a non-refundable fee of $20.00. Plans, specifications, and bid forms may also be downloaded from www.hapcap.org at no charge.

Each bid must be accompanied by either a bid bond, in an amount of 100% of the bid amount with a surety satisfactory to the aforesaid Athens County Commissioners, or by certified check, cashier's check, or irrevocable letter of credit from a solvent bank in the amount of not less than 10% of the bid amount in favor of the aforesaid Athens County Commissioners. Bid Bonds shall be accompanied by Proof of Authority of the official or agent signing the bond.

Bids shall be sealed and marked as Chauncey OH - Sanitary Sewer Facility Improvements and mailed or hand-delivered to:

Athens **County Commissioners**

15 South Court Street (2nd Floor)

Athens, OH 45701

Attention of bidders is called to all of the requirements contained in this bid packet, particularly to the Federal Davis-Bacon Wages, various insurance requirements, various equal opportunity provisions, and the requirement for a payment bond and performance bond for 100% of the contract price.

No bidder may withdraw their bid within ninety (90) days after the actual date of the bid opening thereof. The Athens County Commissioners reserve the right to waive any informality or to reject any or all bids.

INSTRUCTIONS TO BIDDERS

SECTION B

1. **RECEIPT AND OPENING OF BIDS:** The Athens County Commissioners (herein called the "Owner"), invite bids on the form attached hereto, all blanks of which must be appropriately filled in. Bids will be received by the Owner at the office of the Athens **County Commissioners, at** 15 South Court Street, Athens, OH 45701 **until** Tuesday, May 25th, 2021 @ 10:15am at which time they will be publicly opened and read aloud**.** The envelopes containing the bids must be sealed and **addressed** to Athens **County Commissioners, at** 15 South Court Street, Athens, OH 45701**.** Envelopes must be clearly designated for the Chauncey OH - Sanitary Sewer Facility Improvements.

   The Owner may consider informal any bid not prepared and submitted in accordance with the provisions hereof and may waive any informalities or reject any and all bids. Any bid may be withdrawn prior to the above scheduled time for the opening of bids or authorized postponement thereof. Any bid received after the time and date specified shall not be considered. No bidder may withdraw a bid within ninety (90) days after the actual date of the opening thereof.

2. **PREPARATION OF BID:** Each bid must be submitted on the prescribed form and accompanied by the required form in Section F including a bid bond or certified check, the Non-Collusion Affidavit, Certification Regarding Debarment, Suspension, and Other Responsibility Matters Primary Covered Transactions, Experience Statement, Bonding and Insurance Requirements and the Statement on Delinquent Taxes. All blank spaces for bid prices must be filled in, in ink or typewritten, in both words and figures, and foregoing Certifications must be fully completed and executed when submitted.

   The Bidder's total is his total bid based on his unit prices and lump sum prices and the estimated quantities shown on the plans. This figure is for information only at the time of opening bids. The owner will make the tabulation from the unit prices and lump sum prices bid. If there is an error in the total by the bidder, it shall be changed as only the unit prices and lump sum prices shall govern.

   Each bid must be submitted in a sealed envelope, bearing on the outside, the name of the bidder, his/her address, and the name of the project for which the bid is submitted. If forwarded by mail, the sealed envelope containing the bid must be enclosed in another envelope addressed as specified in the bid form.

3. **TELEGRAPHIC MODIFICATION:** Any bidder may modify his/her bid by telegraphic communication at any time prior to the scheduled closing time for receipt of bids, provided such telegraphic communication is received prior to the closing time, and provided further, the Owner is satisfied that a written confirmation of the telegraphic modification over the signature of the bidder was mailed prior to closing time. The telegraphic communication should not reveal the bid price, but should provide the addition or subtraction or other modification so that the final prices or terms will not be known by the Owner until the sealed bid is opened. If written confirmation is not received within two (2) days from the closing time, no consideration will be given to the telegraphic modification.

4. **METHOD OF BIDDING:** The Owner invites unit price/lump sum price bids as indicated in the Bid Form. If the lowest responsive bid received exceeds the amount of funds available to finance the contract, the Owner may:

   a) Reject all bids;
   b) Augment the funds available in an amount sufficient to enable award to the lowest responsive bidder or bidders; and

c) Take the base bid less a number of items as listed on the proposal form as to produce a net amount which is within available funds.

IF THE LOWEST RESPONSIVE BIDDER IS ABOVE 10% OF THE ESTIMATE, ALL BIDS MUST BE REJECTED.

The estimate on this project is: $347,550.00 Maximum Allowable Bid: $382,305.00

5. **QUALIFICATIONS OF BIDDER:** The Owner may make such investigations as he/she deems necessary to determine the ability of the bidder to perform the work, and the bidder shall furnish to the Owner all such information and data for this purpose as the Owner may request. The Owner reserves the right to reject any bid if the evidence submitted by, or investigation of, such bidder fails to satisfy the Owner that such bidder is properly qualified to carry out the obligations of the contract and to complete the work contemplated therein. Conditional bids will not be accepted. Past performance will be an evaluation criterion. Attention is called to Attachment A: QUALITATIVE and RESPONSIBLE CONTRACTOR CRITERIA

6. **BID SECURITY:** Each bid must be accompanied by cash, certified check of the bidder in the amount of 10% of the bid, or a bid bond prepared on the form entitled bid bond attached hereto, duly executed by the bidder as principal and having as surety thereon a surety company approved by the Owner.

   Such cash, checks or bid bonds will be returned to all except the three lowest bidders within three (3) days after the opening of the bids, and the remaining cash, checks or bid bonds will be returned promptly after the Owner and the accepted bidder have executed the contract, or, if no award has been made within ninety (90) days after the date of the opening of bids, upon demand of the bidder at any time thereafter, so long as he/she has not been notified of the acceptance of his/her bid. Attorneys-in-fact who sign bid bonds or contract bonds must file with each bond a certified and effectively dated copy of their power of attorney.

7. **LIQUIDATED DAMAGES FOR FAILURE TO ENTER INTO CONTRACT:** The successful bidder, upon his/her failure or refusal to execute and deliver the contract and bonds required within ten (10) days after he/she has received acceptance of his/her bid, shall forfeit to the Owner, as liquidated damages for such failure or refusal, the security deposited with his/her bid.

8. **CONDITIONS OF WORK:** Each bidder must inform himself/herself fully to the conditions relating to the construction of the project and the employment of labor thereon. Failure to do so will not relieve a successful bidder of his/her obligation to furnish all material and labor necessary to carry out the provisions of his/her contract. Insofar as possible, the contractor in carrying out the work, must employ such methods or means as will not cause any interruption of or interference with the work of any other contractor.

9. **OBLIGATION OF BIDDER:** At the time of the opening of bids, each bidder will be presumed to have inspected the site and to have read and to be thoroughly familiar with the plans and contract documents (including all addenda). The failure or omission of any bidder to examine any form, instrument or document shall in no way relieve any bidder from any obligation in respect of his/her bid.

10. **EXAMINATION OF SITE:** Each bidder shall, and is hereby directed to inspect the entire site of the proposed work and judge for himself/herself as to all the circumstances affecting the cost and progress of the work and shall assume all patent and latent risks in connection herewith.

11. **SOIL CONDITIONS:** Subject to the convenience of the Owners, prospective bidders will be permitted to explore the site by making borings or digging test pits. In such event, the work shall be done at the sole expense and risk of the bidder, and he/she shall maintain and restore the site to original condition.

The Owner does not guarantee the accuracy of any information or samples which it may have obtained from test borings or otherwise as to the kind or condition of the soil that may be encountered in the prosecution of the proposed work, neither does the Owner represent that the plans and specifications drawn are based upon any data so obtained. The Owner does not make any representation as to the soil which may be encountered or of soil or water which underlies the work or is adjacent thereto, including any difficulties that may be due to quicksand, or other unfavorable conditions that may be encountered in the work, whether apparent upon surface inspection or disclosed in the process of carrying forward the work.

12. **WORKING FACILITIES:** The plans/work specifications show, in the general manner, the existing structures and land available for construction purposes. The bidders must satisfy themselves of the conditions and difficulties that may be encountered in the execution of the work at this site.

13. **ADDENDA AND INTERPRETATIONS:** No official interpretation of the meaning of the plans, specifications or other pre-bid documents will be made to any bidder orally. Every request for such interpretation should be in writing addressed to Hocking Athens Perry Community Action and to be given consideration, must be received at least five (5) days prior to the date fixed for the opening of the bids. Any and all such interpretations and any supplemental instructions will be in the form of written addenda to the specifications which, if issued, will be mailed by certified mail or faxed with return receipt requested in both instances to all prospective bidders (at the respective addresses furnished for such purposes), not later than three (3) days prior to the date fixed for the opening of bids. Failure of any bidder to receive any such addendum or interpretation shall not relieve such bidder from any obligation under his/her bid as submitted. All addenda so issued shall become part of the contract documents.

14. **WATER SUPPLY:** All water for construction purposes, as well as the expense of having water conveyed about the work, must be provided by the Contractor and the cost of this work shall be included in the unit prices stipulated for the various items of the work to be done under this contract. The source, quality and quantity of water furnished shall, at all times, be satisfactory to the Engineer and/or Owner or their representatives.

15. **SIGNATURE OF BIDDERS:** The firm, corporate or individual name of the bidder must be signed in ink in the space provided for the signatures on the proposed blanks. In case of a corporation, the title of the officer signing must be stated and such officer must be thereunto duly authorized and the seal of said corporation duly affixed. In the case of a partnership, the signature of at least one of the partners must follow the firm name, using the term "member of the firm". In the case of an individual, use the terms "doing business as", or "sole owner". The bidder shall further state, in his proposal, the name and address of each person or corporation interested therein.

16. **NOTICE OF SPECIAL CONDITIONS:** Attention of the bidder is particularly called to those parts of the General Contract Conditions (Section C) and other contract documents and specifications which deal with the following:

    a) Insurance requirements
    b) Federal Labor Standards Provisions, including Davis-Bacon wage rates
    c) Requirement for a payment bond and performance bond for 100% of contract price
    d) Requirement that all subcontractors be approved by the Owner
    e) Time-for-completion and liquidated damages requirements
    f) Safety standards
    g) Contractor's responsibility to obtain permits
    h) Affirmative Action and Equal Opportunity provisions

17. **ADDITIONAL OBLIGATIONS UPON CONTRACT AWARD:** Upon award of the contract, but prior to execution of the final agreement and notice to proceed, the contractor shall submit all of the following documents, completed as required:

a) Acceptance of Notice of Award
b) Contract
c) Insurance certificate(s) and/or policy(ies), including Bureau of Workers' Compensation documentation
d) Performance bond
e) Certification of Bidder Regarding Section 3 and Segregated Facilities
f) Certification(s) of (all) Proposed Subcontractors Regarding Section 3 and Segregated Facilities
g) Contractor's Certification concerning Labor Standards and Prevailing Wage Requirements
h) (All) Subcontractor's Certification(s) concerning Labor Standards and Prevailing Wage Requirements.
i) ALL OF THE FOLLOWING IF CONTRACT EXCEEDS $10,000.00:
   - Contractor's Section 3 Plan
   - Certification of Bidder Regarding Equal Employment Opportunity
   - Certification(s) by (all) Proposed Subcontractors regarding Equal Employment Opportunity
   - Certification by Contractor and Subcontractors of Compliance with Air and Water Acts

18. **FOREIGN CORPORATIONS AND CONTRACTORS**

A. Foreign Corporations

Definition: "Foreign Corporation" means a corporation incorporated under the laws of another state. No contract shall be entered into with a foreign corporation until the Secretary of State has certified that such corporation is authorized to do business in Ohio; and until, if the bidder so awarded the Contract is a person or partnership, it has filed with the Secretary of State Power of Attorney designating the Secretary of State as its agent for the purpose of accepting service of summons in any action brought under Section 153.05 of the Ohio Revised Code or under Sections 4123.01 to 4123.94, inclusive of the Revised Code.

Attachment A

ADDING "QUALITATIVE and RESPONSIBLE" CONTRACTOR CRITERIA TO THE Athens COUNTY INVITATION TO BID ON ALL CONSTRUCTION PROJECTS SUBJECT TO PREVAILING WAGE THRESHOLD STANDARDS

WHEREAS, the Athens County Board of Commissioners wish to add "Qualitative and Responsible" contractor criteria to the Invitation to Bid for Athens "County Appropriated" construction projects.

WHEREAS, the Commissioners desire to further ensure that the County's contractors are compliant with the law, financially stable, and capable of executing construction contracts in a competent and professional manner; and

WHEREAS, the Commissioners desire to help ensure the opportunity for workers in Athens County to obtain health insurance and pension benefits so desperately needed in today's society as well as the proper training to maintain a quality workforce

WHEREAS, the "Qualitative and Responsible" criteria enumerated in the attached document will be appropriately included in the Athens County Invitation to Bid for construction projects.

BE IT RESOLVED BY THE Athens COUNTY COMMISSIONERS

That the "Qualitative and Responsible" criteria enumerated are hereby approved and will be added to the Athens County Invitation to Bid for construction projects managed by the Athens County Commissioners

1. Before any contracts are awarded for any construction work within the jurisdiction of the Athens County Commissioners they shall, or their agent shall, hold with the apparent "Low" bidder a "Compliance of Scope" Review. This to verify that bidder is in compliance with this resolution and that all required work under contract is included in bid.
2. The "Low" Bidder whose bid is more than twenty percent (20%) below the next lowest bidder shall list three (3) projects that are each within seventy-five percent (75%) of the bid project estimate for similar projects and that were successfully completed by the bidder not more than five (5) years ago. This information shall be provided, if necessary, at the post-bid "Compliance of Scope Review"
3. Any low bidder shall also be prepared to substantiate their cost over-run and job completion timeliness record. This information shall be provided, at the post-bid "Compliance of Scope" Review
4. The successful bidder shall certify that they will employ "qualified craft workers" with the experience and continuity befitting the wages they will be paid and hired from the labor pool. They possess and maintain any appropriate state licenses.
5. The successful bidder must certify that they have not been penalized or debarred from any public contract for falsified certified payroll records or any other violation of the Fair Labor Standards Act in the last five (5) years.
6. The successful bidder must not be debarred from any public contracts or found by the state (after all appeals) to have violated prevailing wage laws in the last 5 years.
7. The successful bidder must certify that they have implemented a drug free workplace policy.
8. The successful bidder must certify they will secure any required bonds from a surety, licensed to do business in the State of Ohio with an A.M. Best Company rating of at least "A".
9. The successful bidder must certify that they have complied with unemployment and worker's compensation laws for at least the nine months preceding the date of bid submittal
10. The successful bidder must certify that they provide a minimum health care plan for those employees that will be working on the proposed project.
11. The successful bidder must certify that they provide a pension or retirement program for those employees that will be working on the proposed project.
12. The successful bidder must submit a list of sub-contractors to be used on the project or before notice to proceed is issued.
13. The successful bidder must certify that their construction license has not been revoked in any state or municipality.

GENERAL CONTRACT CONDITIONS

SECTION C

ARTICLE 1 - CONTRACT AND CONTRACT DOCUMENTS

A. The project to be constructed pursuant to this contract will be financed with assistance from the Department of Housing and Urban Development and is subject to all applicable Federal laws and regulations.

B. All applicable State laws, municipal ordinances, and the rules and regulations of all authorities having jurisdiction over construction of the project shall apply to the contract throughout, and they will be deemed to be included in the contract the same as though herein written out in full.

C. The Plans, Specifications and Addenda, hereinafter enumerated in Paragraph 1 of the Supplemental General Conditions shall form part of this Contract and provisions thereof shall be as binding upon the parties hereto as if they were herein fully set forth. The table of contents, titles, headings, running headlines and marginal notes contained herein and in said documents are solely to facilitate reference to various provisions of the Contract Documents and in no way affect, limit or cast light on the interpretation of the provisions to which they refer.

ARTICLE 2 - PERFORMANCE AND PAYMENT BONDS

Simultaneously with his/her delivery of the executed contract, the Contractor shall furnish a surety bond or bonds as security for faithful performance of this contract and for the payment of all persons performing labor on the project under this Contract and furnishing materials in connection with this contract, as specified in the General Conditions included herein. The surety on such bond or bonds shall be a duly authorized surety company satisfactory to the Owner. The bond shall be for 100 percent of the contract price. A Payment Bond and Performance Bond are required per regulations below:

A state or local unit of government receiving a grant from the Federal government which requires contracting for construction of facility improvement shall follow its own requirement relating to bid guarantees, performance bonds, and payment bonds, except for contracts or subcontracts exceeding $100,000.00. For contracts or subcontracts exceeding $100,000.00, the Federal agency may accept the bonding policy requirement of the grantee provided the Federal agency has made a determination that the Government's interest in adequately protected. If such a determination has not been made, the minimum requirements shall be as follows:

A. *A bid guaranty from each bidder equivalent to ten percent of the proposal price. The "bid guarantee" shall consist of a firm commitment such as a bid bond, certified check, or other negotiable instrument accompanying a proposal as assurance that the bidder will, upon acceptance of his/her proposal, execute such contractual documents as may be required within the time specified.*

B. *A performance bond on the part of the contractor for 100 percent of the contract price. A "performance bond" is one executed in connection with a contract to secure fulfillment of all the contractor's obligations under such contract.*

C. *A payment bond on the part of the contractor for 100 percent of the contract price. A "payment bond" is one executed in connection with a contract to assure payment as required by law of all persons supplying labor and material in the execution of the work provided for in the contract.*

Attorneys-in-fact who sign bid bonds or contract bonds must file with each bond a certified and effectively dated copy of their power of attorney. Under certain conditions, and within the limits of State and local laws and regulations, the Owner may waive the requirement that the Payment and Performance Bond be underwritten by a surety company and may authorize in lieu thereof, a personal bond backed by a letter of credit from a local lending institution for the full value of the Contract.

ARTICLE 3 - WAGE RATES

In the event that the rate of wages paid for any trade or occupant in the locality where such work is being performed are under current collective agreements or understandings between bona fide organizations of labor and employer, then the wages to be paid shall be not less than such agreed wage rates, nor less than the minimum rates compiled by the Federal Labor Standard Provision. A copy of these prevailing rates of wages has been included in these specifications.

Every Contractor and Subcontractor who is subject to this contract shall, as soon as he/she begins performance under his/her contract with the Owner, supply the Owner a schedule of dates on which he/she is required to pay wages to employees. He/She shall also deliver to the prevailing wage coordinator within three weeks after each pay date, a certified copy of his/her payroll which shall exhibit for each employee paid any wages, name, current address, social security number, number of hours worked each day of the pay period and total for each week, hourly rate of pay, job classification, fringe payments, and deductions from wages. The certification of each payroll shall be executed by the Contractor, Subcontractor, or duly executed by the Contractor, Subcontractor, or duly appointed agent thereof and shall recite that the payroll is correct and complete and that the wage rate shown is not less than those required by the contract. **Insofar as possible, local labor shall be employed on this work.**

ARTICLE 4 - AFFIRMATIVE ACTION

Each bidder, Contractor, and/or Subcontractor, must fully comply with either Part 1 or Part 11, as applicable, of Executive Order 1246 as stated during the performance of this contract or subcontract. The Contractor commits itself to the goals for minority manpower utilization in either Part 1 or Part 11, as applicable, and all other requirements, terms and conditions of those proposal conditions by submitting a properly signed bid.

The Contractor shall appoint a company executive to assume the responsibility for the implementation of the requirements, terms and conditions of these bid conditions.

ARTICLE 5 - INSURANCE

A. The Contractor shall not commence work under this Contract until he has obtained all the insurance required hereunder and such insurance has been approved by the Owner, nor shall the Contractor allow any Subcontractor to commence work on his subcontract until all similar insurance required of the Subcontractor has been so obtained and approved. Approval of the insurance by the Owner shall not relieve or decrease the liability of the Contractor hereunder.

B. The Contractor shall file with the Owner all Certificate(s) of Insurance as are necessary to document the insurance coverage required hereunder, subject to the approval of the Owner and receipt of any additional forms/documentation requested, prior to final execution of the Agreement Contract and issuance of the Notice to Proceed.

C. Worker's Compensation

a) All contractors and subcontractors shall acquire and maintain, during the term of the Contract, Worker's Compensation insurance in full compliance with the laws of the State of Ohio.

D. Contractor's Liability Insurance

a) The Contractor shall acquire and maintain during the term of the Contract Bodily Injury and Property Damage Liability Insurance under a standard Comprehensive General/Automobile Liability Policy which shall provide and include coverage on all Contractor's Operations, Contractor's Protective (Sublet) Liability, Contractual Liability, Completed Operations Liability, Owned Automobiles and Non-owned and Hired Automobiles.

b) Property Damage Liability Insurance shall be provided on any demolition, blasting, excavating, shoring or similar operation on an "if any" basis.

c) Bodily Injury Liability limits shall be for an amount of no less than Two Hundred Fifty Thousand ($250,000) Dollars for injuries, including wrongful death to any one person and subject to the same limit for each person, in an amount of not less than Five Hundred Thousand ($500,000) Dollars on the account of any one occurrence.

d) Property Damage Liability insurance shall be in an amount of not less than One Hundred Thousand ($100,000) per occurrence. General Liability shall be extended to provide "Broad Form Property Damage Liability," and in an amount of not less than One Million ($1,000,000) Dollars aggregate for damage on account of all occurrences.

e) Any combination of underlying Comprehensive General/Automobile Liability coverage with Umbrella/Excess Liability coverage which provides no less than One Million ($1,000,000) Dollars Single Limit Bodily Injury and Property Damage Liability Insurance for the Contractor will also be acceptable.

f) The Owner may adjust the liability limits to coincide with local government procurement policies and practice within the limits of state and local law.

E. Builder's Risk Insurance

a) Each Contractor shall maintain insurance from loss incurred by fire, lightning, extended coverage hazards, vandalism, theft, explosion and malicious mischief in the full amount of the Contract and such insurance shall cover all labor and material connected with the work, including materials delivered to the site, but not yet installed. This insurance shall be project specific and valued in the full amount of the contract.

F. Installation Floater Insurance

a) When a contractor is involved solely in the installation of materials and not in the construction of a building (i.e. plumbing), an Installation Floater is required in lieu of a Builder's Risk Policy with the same general conditions applying as set forth in Paragraph E.

G. The Policies as listed above shall all contain all the following special provisions:

a) The Company agrees that thirty (30) days prior to cancellation or reduction of the insurance afforded by this policy with respect to the Contract involved, written notice will be mailed to HOCKING ATHENS PERRY COMMUNITY ACTION AGENCY.

b) The maintaining of such insurance as outlined herein shall in no way constitute a waiver of legal liability for damage to any adjoining buildings or their contents or the work and property of others on the site beyond the limits of insurance thus maintained. The Contractor shall hold the Owner free and harmless from any injury and damage resulting from the negligent or faulty performance of the Contract by the Contractor or by his/her Subcontractors.

c) Each Contractor shall hold the Owner harmless from all payments for patents, either as royalty or otherwise, in the use of materials, methods, appliances, etc., that he may be any way involved in or connected with any part of his work or the work of his Subcontractors.

d) Prior to commencement of any work under the Contract, the Contractor shall furnish one (1) copy of Declaration of Insurance as evidence of coverage.

ARTICLE 6 - SAFETY

A. The Contractor will be responsible for initiating, maintaining and supervising all safety precautions and program in connection with the Work. He/She will take all necessary precautions for the safety of, and will provide the necessary protection to prevent damage, injury, or loss to all employees on the work and other persons who may be affected thereby, and all the work and all materials or equipment to be incorporated therein, whether in storage on or off the site, and other property at the site or adjacent thereto, including trees, shrubs, lawns, walks, pavements, roadways, structures, and utilities not designated form removal, relocation, or replacement in the course of construction.

B. The Contractor will erect and maintain, as required by the conditions and progress of the Work, all necessary safeguards for safety protection. He/She will notify owners of adjacent utilities when prosecution of the work may affect them.

C. The Contractor shall comply with the safety standards guidelines provisions of applicable laws, building and construction codes as well as the requirements of the Occupational Safety and Health Act of 1970, as amended through January 1, 2004, and the requirements of Title 29 of the Code of Federal Regulations. The Chapter shall also comply with Chapter 4104.9-2 of the Ohio Revised Code prohibiting the Employment of Minors in Occupations Hazardous or Detrimental to their health and OSHA Part 1926, Safety and Health Regulations for Construction.

D. The Contractor shall maintain at his/her office or other well-known place at the job site, all articles necessary for giving first aid to the injured, and shall make standing arrangements for the immediate removal to a hospital or a doctor's car of persons (including employees) who may be injured at the job site. In no case shall employees be permitted to work at a job site before the employer has made a standing arrangement for removal of injured persons to a hospital or a doctor's care.

E. Lights, signs and barricades shall be used to maintain traffic and safety for vehicular and pedestrian traffic during the course of this contract in accordance with the specifications.

ARTICLE 7 - PERMITS

The Owner is responsible for obtaining and paying for the following permits: _____ _____. (If blank, contractor is responsible for all permitting necessary.)

The Contractor is responsible for obtaining and paying for all other necessary permits and licenses from the proper authorities. The Contractor shall give all notices and comply with all laws, ordinances, rules, and regulations bearing on the conduct of the work as drawn and specified. If the Contractor observes that the Contract Documents are at variance therewith, he/she shall promptly notify the Owner in writing.

ARTICLE 8 - SUPERVISION

A. The Contractor will supervise and direct the work. He/She will be solely responsible for the means, methods, techniques, sequences, and procedures of construction. The Contractor will employ and maintain on the work site a qualified supervisor or superintendent who shall have been designated in writing by the Contractor at the pre-construction meeting as the Contractor's representative at the site. The Supervisor shall have full authority to act on behalf of the Contractor and communications given to the supervisor shall be as binding as if given to the Contractor. The supervisor shall be present and on the site at all times as required to perform adequate supervision and coordination of the work.

B. The Owner and its representative will, at all times, have access to the work. In addition, authorized representatives and agents of any participating federal or state agency shall be permitted to inspect all work, materials, and payrolls, records of personnel, invoices of materials, and other relevant data and records. The Contractor will provide proper facilities for such access and observation of the work and also for any inspection or testing thereof.

C. The Contractor shall submit a proposed program of operation, showing clearly how he/she proposed to conduct the work as to bring about the completion of his/her work within the time limit specified. This program shall outline the proposed sequence of operations, the rates of progress and the dates when his/her work will be sufficiently advances to permit the installation of the work under other contract, and the estimated progress payments due under the Contract. The work under this contract shall be so scheduled that as structures are completed, they can be placed into useful operation with a minimum of delay. The program shall be subject to the approval of the Owner.

D. All construction as proposed along all City, Township, County, State and Federal roads including storage and stockpiling of materials, is to be conducted within the limits of the public right-of-way. Bracing, sheeting and shoring shall be used to keep all construction work within the construction limits unless work agreements are secured from the adjacent property owners. It is the Contractor's responsibility to secure these work agreements, if deemed necessary. Copies of the work agreements shall be delivered to the Engineer and the Owner prior to any work beginning on the affected property.

ARTICLE 9 - CLAIMS AGAINST CONTRACTOR

The Contractor shall indemnify and save the Owner or the Owner's agents harmless from all claims growing out of the lawful demands of Subcontractor's laborers, workmen, mechanics, materialmen, and furnishers of machinery and parts thereof, equipment, tools, and all supplies, incurred in the furtherance of the performance of the work. The Contractor shall, at the Owner's request, furnish satisfactory evidence that all obligations of the nature designated above have been paid, discharged, or waived. If the Contractor fails to do so, the Owner, may, after having notified the Contractor, wither pay unpaid bills or withhold from the Contractor's unpaid compensation a sum of money deemed reasonably sufficient to pay any all such lawful claims until satisfactory evidence is furnished that all liabilities have been fully discharged whereupon payment to the Contractor shall be resumed, in accordance with the terms of the Contract Documents, but in no event shall the provisions of this sentence be construed to impose any obligations upon the Owner to either the Contractor, his Surety, or any third party. In paying any unpaid bills of the Contractor, any payment so made by the Owner shall be considered as a payment made under the Contract Documents by the Owner to the Contractor and the Owner shall not be liable to the contractor for any such payments in good faith.

ARTICLE 10 - SUBCONTRACTING

A. Neither the Contractor nor the Owner shall sell, transfer, assign, or otherwise dispose of his right, title, or interest therein, or his obligations thereunder.

B. The Contractor shall not sublet, sell, transfer or assign any portion of the contract without written consent

of the Owner of his/her designated agent. When such consent is given, the Contractor will be permitted to sublet a portion thereof, but shall perform with his/her own organization, work amounting to no less than fifty percent of the total contract cost, except that any item designated in the contract before computing the amount of work required to be performed by the Contractor with his/her own organization. No subcontract, or transfer of contract, shall in any way release the Contractor of his/her liability under the contract and bonds.

C. The Contractor shall not award work to Subcontractor(s) without prior written approval of the Owner, after verification by the Ohio Department of Development of the subcontractor's current eligibility status, and after submission of all certifications as required in

INSTRUCTIONS TO BIDDERS. The Contractor shall be fully responsible to the Owner for the acts and omissions of the subcontractor(s), and of the persons either directly or indirectly employed by them, as he is for the acts and omissions of persons directly employed by him/her.

ARTICLE 11 - CHANGE OF WORK

A. The Owner reserves the right to make, at any time during the progress of the work, such increases or decreases in quantities and such alterations in details of work as may be deemed necessary or desirable. Such increases or decreases and alterations shall not invalidate the contractor nor release the surety, the Contractor agrees to perform the work as altered, the same as if it had been a part of the original contract.

B. Authorized alterations in plans or quantities of work involving work not covered by unit prices in the proposal are paid for as stipulated in the change order authorizing such work.

C. No changes in work covered by the approved Contract shall be made without having prior written approval of the Owner.

ARTICLE 12 - TIME

A. The Date of beginning and time for completion of the work are essential conditions of the Contract Documents and work embraced shall be commenced on a date specified in the Notice to Proceed.

B. The Contractor will proceed with the work at such rate of progress to ensure full completion with in the Contract Time. It is expressly understood and agreed, by and between the Contractor and the Owner, that the Contract Time for the completion of the work described herein is a reasonable time, taking into consideration the average climatic and economic conditions and other factors prevailing in the locality of the work.

C. The Contract Time to fully complete the project shall be 90 consecutive calendar days following the date of commencement of work to be specified in a written "Notice to Proceed".

D. If the Contractor shall fail to complete the work within the Contract Time, and an extension of time is not granted by the Owner, the Contractor will pay the Owner for liquidated damages $100.00 for each calendar day that the Contractor shall be in default after the time stipulated in the Contract Documents.

ARTICLE 13 - COMPLETION OF WORK

A. The Contractor shall guarantee all materials and equipment furnished and work performed for a period of one year from the date of Substantial Completion. The Contractor warrants and guarantees for a period of one year from the date of Substantial Completion of the improvement that it is free from all defects due to faulty materials or workmanship, and the Contractor shall promptly make corrections as may be necessary by reason of such defects. The Owner will give notice of observed defects with reasonable

promptness. In the event that the Contractor should fail to make repairs, adjustments, or other work which may be made necessary by such defects, the Owner may do so and charge the Contractor the cost thereby incurred. The Contract Bond shall remain in full force and effect through the guarantee period.

B. When the work, including that performed by Subcontractors, is completed, the site shall be cleaned of all rubbish and debris caused by the construction. All sheds or other temporary structures, surplus materials, and equipment shall be removed and the project left in a neat and presentable condition.

ARTICLE 14 - TERMINATION

After ten (10) days from delivery of a Written Notice to the Contractor, the Owner may, without cause and without prejudice to any other right or remedy, elect to terminate the Contract. In such case, the Contractor shall be paid for all work executed and any expense sustained plus reasonable profit, unless such termination was due to the act or conduct of the Contractor.

ARTICLE 15 - PAYMENT

Payment to the Contractor shall be made by the Owner as follows: **100% upon completion or in draws of approximately 50%. Payment will be made only on work that is complete**. The Owner's Representative shall certify on the pay request that he approved the completed work prior to the Owner making payment. Upon receipt of an approved invoice from the Contractor, the Owner shall submit a drawdown request to the Ohio Department of Development for CDBG funds to pay the Contractor. A turnaround time of 30 - 45 days is expected before said funds are forwarded to the Owner.

SUPPLEMENTAL GENERAL CONDITIONS

1. ENUMERATION OF PLANS, SPECIFICATIONS AND ADDENDA

Following are the Plans, Specifications and an Addenda which form a part of this contract, as set forth in Article I of the General Contract Conditions, "Contract and Contract Document".

Drawings	**Number**	**Date**
See Section D		

Specifications		
See Section D		

Addenda	**Number**	**Date**
See Section D		

2. STATED ALLOWANCES

The Contractor shall include the following cash allowances in his proposal: N/A

3. SPECIAL HAZARDS: N/A

4. CONTRACTOR'S AND SUBCONTRACTOR'S PUBLIC LIABILITY, VEHICLE LIABILITY, AND PROPERTY DAMAGE INSURANCE

a. As required under Article 5 of the General Contract Conditions, the Contractor's Public Liability Insurance and Vehicle Liability Insurance shall be in an amount not less than $1,000,000 for injuries, including accidental death, to any one person, and subject to the same limit for each person in an amount not less than $500,000 on account of one accident, and Contractor's Property Damage Insurance in an amount not less than $1,000,000.

b. The Contractor shall either (1) require each of his subcontractors to procure and to maintain during the life of his subcontract, Subcontractor's Public Liability and Property Damage of the type and in the same amount as specified in the preceding paragraph, or (2) insure the activities of his subcontractors in his own policy.

5. PHOTOGRAPHS OF THE PROJECT

The Contractor will furnish photographs in the number, type and state as enumerated: N/A

6. SCHEDULE OF FEDERAL OCCUPATIONAL CLASSIFICATIONS AND DAVIS-BACON MINIMUM HOURLY WAGE RATES

Refer to Section E

WORK SPECIFICATIONS

SECTION D

VILLAGE OF CHAUNCEY SEWER FACILITY IMPROVEMENTS

ATHENS COUNTY COMMISSIONERS / HAPCAP / VILLAGE OF CHANUCEY

CONVERSE STREET, CHAUNCEY, OHIO

PROJECT LOCATION

PROJECT OVERVIEW

THE PROJECT SHALL CONSIST OF THE REPAIR/REPLACEMENT OF APPROXIMATELY 800–LF OF AGING SANITARY LINES, INCLUDING REHABILITATION OF MANHOLES.

SPECIFIC WORK ITEM EXCEPTIONS AND CLARIFICATIONS ARE NOTED ON THE DRAWINGS.

WORK SHALL BE AS REQUIRED TO FULLY MEET THE INTENT OF THE PROJECT DOCUMENTS.

CONTRACTORS SHALL BE RESPONSIBLE FOR ALL LABOR, MATERIALS, TAXES, ETC. ASSOCIATED WITH THE RESPECTIVE WORK AS SPECIFIED IN THE PROJECT DOCUMENTS.

INDEX OF DRAWINGS

C000	GENERAL NOTES
C100	MASTER PLAN
C101	SANITARY REPAIR PLAN & PROFILE (SHEET 1 OF 2)
C102	SANITARY REPAIR PLAN & PROFILE (SHEET 2 OF 2)
C103	TEMPORARY TRAFFIC CONTROL PLAN (SHEET 1 OF 2)
C104	TEMPORARY TRAFFIC CONTROL PLAN (SHEET 2 OF 2)
C500	SECTIONS AND DETAILS

CIVIL

REGISTERED PE:

STATE OF OHIO
JOHN ROBERT BENTZ
84436
REGISTERED PROFESSIONAL ENGINEER

04/07/21

DATE

PICKERING ASSOCIATES

Architects • Engineers • Surveyors

11283 Emerson Avenue
Parkersburg, West Virginia 26104

Phone: (304) 464-5305
Fax: (304) 464-4428

ISSUED FOR
BID/CONSTRUCTION
04/07/2021
2202052

ABBREVIATIONS

AFC/F/G	ABOVE FINISHED CEILING/ FLOOR/GRADE
ARCH	ARCHITECT(URAL)
BIT	BITUMINOUS
BL	BUILDING LINE
BLDG	BUILDING
BM	BENCH MARK
BOT	BOTTOM
CB	CATCH BASIN
CIP	CAST-IN-PLACE
CL	CENTERLINE
CLR	CLEARANCE
CMU	CONCRETE MASONRY UNIT
CJ	CONSTRUCTION/CONTROL JOINT
CO	CLEANOUT
COL	COLUMN
CONC	CONCRETE
CONST	CONSTRUCTION
CONT	CONTINUOUS
DBO	DESIGN BY OTHERS
DET	DETAIL
DN	DOWN
D&R	DEMOLISH & REMOVE
DS	DOWNSPOUT
DWG	DRAWING
EA	EACH
EJ	EXPANSION JOINT
EL	ELEVATION
EQ	EQUAL
EQUIP	EQUIPMENT
ES	EACH SIDE
EW	EACH WAY
EXIST	EXISTING
EXT	EXTERIOR
FDN	FOUNDATION
FF	FINISHED FLOOR
FH	FIRE HYDRANT
FLR	FLOOR
FS	FAR SIDE
FIN	FINISHED
FTG	FOOTING
GA	GAUGE/GAGE
GALV	GALVANIZED
GND	GROUND
HMA	HOT-MIX-ASPHALT
HP	HIGH POINT

ABBREVIATIONS CONT.

I/	INSIDE OF
ID	INSIDE DIAMETER
INCL	INCLUD(E)(ING)
INS	INSULATION
INT	INTERIOR
INV	INVERT
ISO	ISOLATION
JT	JOINT
LP	LOW POINT
MAS	MASONRY
MFR	MANUFACTURER
MH	MANHOLE
NIC	NOT IN CONTRACT
NS	NEAR SIDE
NTS	NOT TO SCALE
O/	OUTSIDE OF
OC	ON CENTER
OD	OUTSIDE DIAMETER
OH	OVERHEAD/OVERHANG
OPNG	OPENING
OPP	OPPOSITE
PC	PRECAST
PLC(S)	PLACE(S)
PVMT	PAVEMENT
QTY	QUANTITY
RD	ROOF DRAIN
REINF	REINFORCING
REQD	REQUIRED
RM	ROOM
SCH	SCHEDULE
SECT	SECTION
SP	SPACE
SPEC	SPECIFICATION(S)
SQ	SQUARE
SS	STAINLESS STEEL
STA	STATION
STD	STANDARD
STL	STEEL
STR	STRUCTURAL
SW	SIDEWALK
T&B	TOP AND BOTTOM
TBD	TO BE DETERMINED
T/	TOP OF
UNO	UNLESS NOTED OTHERWISE
VIF	VERIFY IN FIELD
WWF	WELDED WIRE FABRIC

REFERENCES

1. PICKERING ASSOCIATES SURVEY (2020)
2. CITY OF ATHENS STANDARD DRAWINGS

AUTHORITY CONTACTS

LENNY ELIASON, ATHENS COUNTY COMMISSIONER	(740-592-3219)
NATHAN SIMONS, HAPCAP	(740-767-4500)
CHRIS RUSSELL, CHAUNCEY VILLAGE ADMINISTRATOR	(740-797-2303)
ATHENS COUNTY PLANNING COMMISSION	(740-447-5890)
OHIO EPA DIVISION OF SURFACE WATER	(614-644-2001)

UTILITY CONTACTS

DOMINION EAST OHIO (800-282-9779)
AMERICAN ELECTRIC POWER (AEP) (740-568-2818)
SBC (740-373-9904)
SUDDENLINK (304-422-6333)

SCOPE

BASE BID:
THE PROJECT SCOPE OF WORK GENERALLY INCLUDES ALL WORK ASSOCIATED WITH THE REPAIR AND REPLACEMENT OF APPROXIMATELY 800-LF OF AGING SANITARY LINES ALONG CONVERSE STREET IN CHAUNCEY, OHIO, INCLUDING MANHOLE REHABILITATION.

SUGGESTED PHASING OF WORK (CONTRACTOR SHALL SUBMIT FINAL PHASING TO ENGINEER):
PHASE 1: WORK FROM MH-4 TO MH-3 (SYCAMORE STREET INTERSECTION, WORKING SOUTH)
PHASE 2: WORK FROM MH-3 TO MH-2 (MID-BLOCK TO MOUND STREET INTERSECTIONS)
PHASE 3: WORK FROM MH-3 TO MH-4 (MOUND STREET TO MAIN STREET INTERSECTIONS)

ALTERNATE NO. 1:
PROVIDE MATERIALS AND LABOR TO INSTALL NEW DROP CONNECTION TO MH-2 AND PROVIDE STUB OUT OF MANHOLE TO A CAP. (SEE DWGS. C101 AND C500)

SYMBOL LEGEND

- CODED NOTE
- REVISION TRIANGLE
- SECTION
- ELEVATION
- DETAIL
- FOUNDATION TYPE/MARK NUMBER
- XXX — XXX SPOT ELEVATION
- BEARING ELEVATION OR TOP SURFACE ELEVATION
- MANHOLE
- CATCH BASIN
- FIRE HYDRANT
- GUY WIRE
- COLUMN GRID
- LIGHT POLE
- UTILITY POLE
- TELEPHONE POLE
- POWER POLE
- GAS/WATER VALVE
- WATER METER
- GAS METER
- SIGN
- TREE (DECID./EVERGREEN)
- BUSH
- CLEAN-OUT
- POINT
- SOIL BORING/BENCH MARK/ TIE-IN/WORK POINT

MATERIAL LEGEND

- FIBER-REINFORCED CONCRETE
- CONCRETE
- WELL-GRADED STONE/GRAVEL
- UNIFORM-GRADED STONE/GRAVEL
- SOIL
- BEDROCK
- GRASS
- SAND, HMA, OR GYPSUM

LINETYPE LEGEND

- EDGE OF GRAVEL
- EDGE OF PAVEMENT
- PROPERTY LINE
- LOT LINE
- RIGHT-OF-WAY
- GENERAL OH LINE
- OH TELEPHONE/ELECTRIC LINE
- UNDERGROUND TELEPHONE/ELECTRIC LINE
- OH TELEPHONE LINE
- UNDERGROUND TELEPHONE LINE
- OH ELECTRIC LINE
- UNDERGROUND ELECTRIC LINE
- SANITARY SEWER LINE
- STORM SEWER LINE
- GAS LINE
- WATER LINE
- COMMUNICATION LINE
- UNDERDRAIN
- WATER EDGE
- DITCH OR SWALE
- BREAKLINE OR SLOPE LINE
- CONSTRUCTION LIMITS (CUT)
- CONSTRUCTION LIMITS (FILL)
- CONSTRUCTION/CONTROL JOINT
- EXP/ISO JOINT
- BARBED WIRE FENCE
- CHAIN LINK FENCE
- BOUNDARY
- CENTERLINE
- RAILING
- MISCELLANEOUS PIPING
- MATCHLINE
- EXISTING GROUND/GRADE
- FINISHED GROUND/GRADE
- LOD — LIMIT OF DISTURBANCE

SECTION AND DETAIL NOTATION

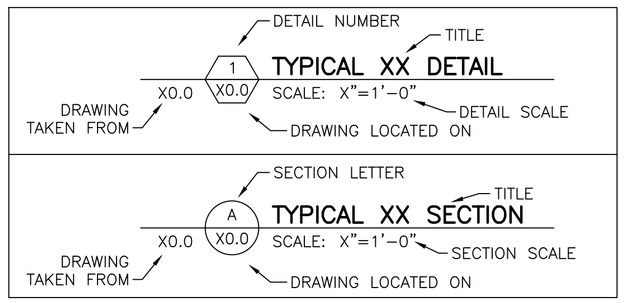

A. GOVERNING SPECIFICATIONS

1. THE GOVERNING SPECIFICATIONS FOR THE PROJECT SHALL BE THE OHIO DEPARTMENT OF TRANSPORTATION (ODOT) CONSTRUCTION AND MATERIAL SPECIFICATIONS (CMS) AND STANDARD CONSTRUCTION DRAWINGS, BOTH LATEST EDITIONS, AS AMENDED BY THE OHIO DEPARTMENT OF TRANSPORTATION SUPPLEMENTAL SPECIFICATIONS, ISSUED APRIL 15, 2016, THE OHIO DEPARTMENT OF NATURAL RESOURCES (ODNR) LAND DEVELOPMENT AND RAINWATER MANUAL, AND THE ODOT HANDBOOK FOR SEDIMENT AND EROSION CONTROL, FEBRUARY 2000. THE CONTRACT DOCUMENTS ARE THE GOVERNING PROVISIONS APPLICABLE TO THE PROJECT.
2. ALL WORK SHALL CONFORM TO THE APPLICABLE REQUIREMENTS OF THE GOVERNING AUTHORITIES HAVING JURISDICTION INCLUDING ALL APPLICABLE CODES, SPECIFICATIONS, STANDARDS, AND GUIDELINES ADOPTED BY SUCH AUTHORITIES.
3. DISCREPANCIES BETWEEN THE PLANS AND VARIOUS CODES, STANDARDS, SPECIFICATIONS, ETC. SHALL BE BROUGHT TO THE ATTENTION OF THE ENGINEER FOR REMEDIATION.
4. THE CONTRACT DOCUMENTS SHALL SUPPLEMENT AND AMEND THE GOVERNING SPECIFICATIONS/OTHER REFERENCED SPECIFICATIONS AND SHALL RULE IN CASE OF CONFLICT. IT SHALL BE THE CONTRACTOR'S RESPONSIBILITY TO EITHER ACQUIRE REFERENCE SPECIFICATIONS OR CONTACT THE ENGINEER CONCERNING HOW TO ACQUIRE SUCH SPECIFICATIONS.

B. PERMITS

1. ALL OUTSTANDING FEDERAL, STATE, AND LOCAL PERMITS ASSOCIATED WITH THE PROJECT SHALL BE OBTAINED. THE COST OF ALL PERMITS SHALL BE INCIDENTAL TO THE PROJECT BID.
2. PROPER PERMIT DOCUMENTATION SHALL BE KEPT ON SITE AT ALL TIMES AND ALL CONSTRUCTION SHALL BE IN ACCORDANCE WITH THE RESPECTIVE PERMITS. ALL PERMIT CONDITIONS SHALL BE PROPERLY COMPLETED (E.G. INSPECTION SCHEDULING).
3. ALL PERMITS SHALL BE OBTAINED PRIOR TO COMMENCEMENT OF WORK.
4. THE ENGINEER SHALL BE RESPONSIBLE FOR PROVIDING PERMIT APPLICATIONS TO THE OWNER/CONTRACTOR, PROVIDING ENGINEERING DATA REQUIRED BY THE PERMIT, AND PROVIDING LIMITED ASSISTANCE WITH APPLICATION COMPLETION. OWNER/CONTRACTOR SHALL BE RESPONSIBLE FOR AUTHORITY COORDINATION, COMPLETION OF PERMIT APPLICATIONS, AND PERMIT ACQUISITIONS.

C. INSPECTIONS, SAMPLING, AND TESTING

1. ALL INSPECTIONS, SAMPLING, AND TESTING OF WORK ITEMS INCLUDING, BUT NOT LIMITED TO, THE FOLLOWING: EXCAVATION, EMBANKMENT, SOIL COMPACTION, SUBGRADE PREPARATION, BACKFILL, AGGREGATE BASE, CONCRETE, AND ASPHALT SHALL BE IN ACCORDANCE WITH THE ODOT CMS, MANUFACTURER SPECIFICATIONS, ACI 301/318, THE PROJECT DOCUMENTS, AND AUTHORITIES HAVING JURISDICTION REQUIREMENTS. INSPECTION, SAMPLING, AND TESTING SHALL BE PERFORMED BY AN INDEPENDENT, CERTIFIED TESTING AGENCY APPROVED BY THE OWNER AND EMPLOYED BY THE CONTRACTOR. ALL RESULTS SHALL BE PROMPTLY REPORTED TO THE OWNER. THE OWNER, AT THEIR EXPENSE, MAY ALSO RETAIN A QUALIFIED PROFESSIONAL TO PERFORM INDEPENDENT QUALITY CONTROL/ASSURANCE CHECKS ON THE CONTRACTOR'S WORK. WHERE QC/QA REQUIREMENT CONFLICTS EXIST, PROJECT MANUAL REQUIREMENTS SHALL RULE. WHERE DOT SPECIFICATIONS APPLY, THE CONTRACTOR SHALL PERFORM DUTIES ASCRIBED TO THE "CONTRACTOR", "ENGINEER", AND "DEPARTMENT" WITH THE OWNER RESERVING THE OPTION TO PERFORM DUTIES SIMILAR OR DIFFERENT TO THOSE ASCRIBED TO THE "ENGINEER" AND "DEPARTMENT". WHERE DUTIES ARE DUPLICATED, THE CONTRACTOR SHALL PERFORM THE MOST STRINGENT.

D. MISCELLANEOUS

1. THE INFORMATION SHOWN ON THESE DRAWINGS IS BASED UPON EXISTING DRAWINGS, THE TOPOGRAPHIC SURVEY, AND OWNER-PROVIDED INFORMATION.
2. CONTRACTOR SHALL RESTRICT ALL CONSTRUCTION ACTIVITIES TO PUBLIC RIGHT-OF-WAY.
3. ALL ADJACENT STRUCTURES AND UTILITY SERVICES SHALL BE PROTECTED FROM DAMAGE DURING CONSTRUCTION.
4. ALL OPEN TRENCHES SHALL BE SECURED PRIOR TO CONSTRUCTION ENDING FOR THE DAY. TRENCHES REQUIRED TO BE LEFT OPEN SHALL BE COVERED WITH STEEL PLATING.
5. ALL PHASES OF WORK SHALL BE SUBJECT TO INSPECTION, TESTING AND ACCEPTANCE BY ENGINEER AND/OR OWNER.
6. A SAFE AND ORDERLY WORKSITE SHALL BE MAINTAINED AT ALL TIMES.
7. THE LOADING/UNLOADING AND HAULING OF ALL MATERIALS TO AND FROM THE CONSTRUCTION SITE SHALL BE INCLUDED.
8. ALL CONSTRUCTION WORK RELATED TO THESE DRAWINGS SHALL BE COORDINATED WITH THE OWNER AND OTHER CONTRACTORS THAT MAY BE INVOLVED WITH THE PROJECT.
9. ALL UNDERGROUND UTILITIES AND SUBSURFACE STRUCTURES ARE SHOWN IN THEIR APPROXIMATE LOCATION. ALL DAMAGE TO SUBSURFACE INSTALLATIONS, WHETHER SHOWN OR NOT, SHALL BE REPAIRED TO THE SATISFACTION OF THE OWNER AT THE CONTRACTOR'S EXPENSE.
10. THE CONTRACTOR SHALL SUBMIT FOUR (4) SETS OF DETAILED SHOP DRAWINGS TO THE VILLAGE ADMINISTRATOR FOR APPROVAL PRIOR TO THE MANUFACTURE OR FABRICATION OF ANY MATERIALS WHICH ARE TO BE FURNISHED AS A PART OF THE PROJECT.

E. WASTE MATERIAL

1. ALL MATERIAL REMOVED AND NOT REUSED IN THE CONSTRUCTION OF THIS PROJECT SHALL BE REMOVED FROM THE PROJECT AND PROPERLY DISPOSED IN ACCORDANCE WITH THE APPROPRIATE GOVERNING AUTHORITIES.

F. ACCESS

1. SAFE ACCESS SHALL BE PROVIDED AT ALL TIMES TO THE RESIDENTS AND BUSINESSES AFFECTED BY CONSTRUCTION. ALL ACCESS SHALL BE IN COMPLIANCE WITH THE AMERICANS WITH DISABILITIES ACT (ADA). ALL TRAFFIC FLOW DISTURBANCES SHALL BE MINIMIZED. ALL DISTURBANCES MUST BE ACCOMPLISHED SAFELY AND IN ACCORDANCE WITH ALL LOCAL, STATE, AND FEDERAL REGULATIONS.
2. TRAFFIC CONTROL PRACTICES MUST BE USED AT ALL TIMES AND SHALL CONFORM TO THE OHIO DEPARTMENT OF TRANSPORTATION TEMPORARY TRAFFIC CONTROL MANUAL. DRAWINGS C103 AND C104 ARE PROVIDED AS SUGGESTED TRAFFIC CONTROL MEASURES. ANY DEVIATIONS FROM THESE PLANS SHALL BE SUBMITTED TO THE ENGINEER FOR REVIEW.
3. STRONG CONSIDERATION SHALL BE GIVEN BY CONTRACTOR TO PERFORM WORK NOTED AS PHASE 3 ON PLANS DURING OVERNIGHT HOURS TO MINIMIZE AFFECTED TRAFFIC FLOW DUE TO TRAFFIC VOLUMES.
4. IT IS THE RESPONSIBILITY OF THE CONTRACTOR TO ENSURE THAT THE MAIL SERVICE IS NOT INTERRUPTED.

G. VERIFICATIONS

1. ALL DIMENSIONS AND SITE CONDITIONS SHALL BE VERIFIED IN THE FIELD PRIOR TO CONSTRUCTION. IMMEDIATELY NOTIFY THE ENGINEER OF ANY DISCREPANCIES.

H. FINAL CLEAN-UP

1. ALL PROPERTY, BOTH PUBLIC AND PRIVATE, WHICH HAS BEEN DAMAGED DURING THE EXECUTION OF THE WORK SHALL BE RESTORED IN AN ACCEPTABLE MANNER. THE SITE SHALL BE LEFT IN A NEAT AND PRESENTABLE CONDITION.
2. ALL WORK MUST MEET THE ENGINEER AND OWNER'S APPROVAL.
3. ALL PRIVATE DRIVEWAY SURFACES WHICH ARE DISTURBED DURING CONSTRUCTION SHALL BE REPLACED WITH A MATCHING SURFACE MATERIAL AS GOOD OR BETTER THAN THE PREVIOUSLY EXISTING MATERIAL REMOVED, AS SOON AS POSSIBLE. TRENCH BACKFILLING UNDER THE DRIVES AND PAVEMENT RECONSTRUCTION IS TO BE THE SAME AS FOR PAVED STREETS.

I. DEMOLITION

1. CONSTRUCTION DEBRIS AND DEMOLITION DEBRIS MUST BE DISPOSED IN AN OHIO EPA APPROVED LANDFILL.

J. WORK STOPPAGE

1. ANY WORK STOPPAGE INCURRED DUE TO THE CONTRACTOR'S NEGLIGENCE OR FAILURE TO COMPLY WITH A MITIGATION ITEM SHALL BE REMEDIED AT NO COST TO THE OWNER.
2. SEDIMENT AND EROSION CONTROL FEATURES SHALL BE OPERATED AND MAINTAINED IN AN ACCEPTABLE CONDITION.
3. WHEN ANY EROSION OR SEDIMENT CONTROL FEATURE HAS REACHED HALF ITS CAPACITY, THE DEVICE SHALL BE CLEANED OUT AND RESTORED TO ITS ORIGINAL CONDITION.
4. A SPILL PREVENTION, CONTROL, AND COUNTERMEASURES (SPCC) PLAN THAT ITEMIZES SPECIFIC MEASURES THAT WILL BE IMPLEMENTED TO PREVENT AND CLEAN UP CHEMICAL AND PETROLEUM PRODUCT SPILLS THAT MAY OCCUR DURING ALL PHASES OF PROJECT CONSTRUCTION SHALL BE PREPARED. FUEL STORAGE AND REFUELING ACTIVITIES, EQUIPMENT MAINTENANCE ACTIVITIES, AND EQUIPMENT WASHING SHALL BE KEPT AT LEAST 500 FEET AWAY FROM ANY PERENNIAL OR INTERMITTENT WATERCOURSE OR WETLAND.

K. TEMP. SEDIMENT/EROSION CONTROL & STORM WATER POLLUTION PREVENTION PLAN

1. ALL TEMPORARY AND PERMANENT SEDIMENT AND EROSION CONTROL AND STORM WATER POLLUTION PREVENTION ACTIVITIES SHALL BE CONSIDERED INCIDENTAL TO THE PROJECT. ALL STATE AND FEDERAL REGULATIONS, INCLUDING THE ODOT HANDBOOK FOR EROSION AND SEDIMENT CONTROL, THE ODNR RAINWATER AND LAND DEVELOPMENT STANDARDS, AND ODOT CMS207 SHALL BE OBSERVED. IN THE EVENT TEMPORARY EROSION AND SEDIMENT CONTROL MEASURES ARE ORDERED BY THE ENGINEER DUE TO THE CONTRACTOR'S NEGLIGENCE, CARLESSNESS, OR FAILURE TO INSTALL REQUIRED CONTROLS AS PART OF THE WORK SCHEDULE, SUCH WORK SHALL BE PERFORMED AT NO ADDITIONAL COST TO THE OWNER. THE LOCATION AND TIMING OF ALL EROSION AND SEDIMENT CONTROL ITEMS SHALL BE FIELD ADJUSTED TO PREVENT SIGNIFICANT IMPACTS ON RECEIVING WATERS. IMPLEMENTATION OF THIS STORM WATER POLLUTION PREVENTION PLAN SHALL CONTINUE THROUGHOUT THE DURATION OF THE PROJECT OR UNTIL SUCH TIME THAT THE UPSLOPE DISTURBED AREAS ARE STABILIZED. ALL REASONABLE ATTEMPTS SHOULD BE MADE TO MINIMIZE THE TOTAL AREA OF DISTURBED LAND. SEDIMENT CONTROL DEVICES SHALL BE IMPLEMENTED WITHIN 7 DAYS OF GRUBBING FOR ALL AREAS REMAINING DISTURBED FOR OVER 14 DAYS. A SPILL PREVENTION, CONTROL, AND COUNTERMEASURES (SPCC) PLAN THAT ITEMIZES SPECIFIC MEASURES THAT WILL BE IMPLEMENTED TO PREVENT AND CLEAN UP CHEMICAL AND PETROLEUM PRODUCT SPILLS THAT MAY OCCUR DURING ALL PHASES OF PROJECT CONSTRUCTION SHALL BE PREPARED. FUEL STORAGE AND REFUELING ACTIVITIES, EQUIPMENT MAINTENANCE ACTIVITIES AND EQUIPMENT WASHING SHALL BE KEPT ATLEAST 500 FEET AWAY FROM ANY PERENNIAL OR INTERMITTENT WATERCOURSE OR WETLAND.
2. TEMPORARY AND PERMANENT SEEDING AND MULCHING SHALL BE PERFORMED AS REQUIRED IN ACCORDANCE WITH THE PROJECT DOCUMENTS.

L. SEEDING, FERTILIZING, AND MULCHING

1. UNLESS NOTED OTHERWISE, ALL DISTURBED SOIL AREAS ARE TO BE SEEDED, FERTILIZED, AND MULCHED. SEEDING, FERTILIZING, AND MULCHING WILL BE AS SPECIFIED ODOT CMS 601, 659, 670, AND 671. AREAS 3:1 OR FLATTER SHALL RECEIVE A TYPE C-2 MIXTURE (OWNER-APPROVED LAWN MIX). AREAS STEEPER THAN 3:1 SHALL RECEIVE A TYPE L MIXTURE. DISTURBED AREAS OVER 50 FEET AWAY FROM A STREAM SHALL BE SEEDED AND MULCHED WITHIN 7 DAYS OF REACHING FINAL GRADE. OTHER SUCH AREAS SHALL BE SEEDED AND MULCHED WITHIN 2 DAYS OF REACHING FINAL GRADE. GRADE. TESTING WILL NOT BE REQUIRED ON THESE ITEMS PURCHASED FROM A REPUTABLE DEALER. ALL DAMAGES TO PREVIOUSLY SEEDED AREAS SHALL BE REPAIRED.

M. CONCRETE

1. ALL CONCRETE AND REINFORCEMENT SHALL BE IN ACCORDANCE WITH EACH ITEM'S RESPECTIVE ODOT CMS SECTION. OTHERWISE, CONCRETE SHALL BE ODOT CLASS C WITH A 28 DAY STRENGTH OF 4000 PSI, REINFORCING STEEL SHALL BE DEFORMED AND CONFORM TO ASTM A-615 GRADE 60 OR ASTM A-497 GRADE 60, CONCRETE SURFACES SHALL BE LEVEL/SLOPED AS INDICATED AND FINISHED/EDGED PER ODOT CMS 511, AND CONCRETE SHALL BE MOIST CURED PER ODOT CMS 511 (MEMBRANE CURING COMPOUND MUST BE APPROVED).
2. ALL REINFORCING STEEL SHALL BE IN PLACE WITH THE AREA FREE FROM ALL DEBRIS AND STANDING WATER PRIOR TO PLACING CONCRETE. WIRE CHAIRS SHALL BE USED TO SUPPORT REINFORCING STEEL AT INTERVALS ADEQUATE TO ENSURE THE LOCATION OF ALL REQUIRED REINFORCING.
3. WHERE NOTED, EXPANSION JOINT MATERIAL AND JOINT SEALANTS SHALL BE IN ACCORDANCE WITH THE APPROPRIATE ODOT CMS SECTION.
4. ISOLATION JOINT TREATMENT: USE A PREFORMED EXPANSION JOINT MATERIAL TREATED WITH WAX (OR EQUIVALENT BOND-BREAKER). OUTER FACE OF JOINT MATERIAL TO BE 1/2" FROM SURFACE OF CONCRETE OR MASONRY (1" FOR PAVEMENT) WITH THE SPACE SEALED WITH FLEXIBLE JOINT SEALER (VERTICAL JT. & 1" RETURN: SIKAFLEX 1a; HORIZONTAL JT.: SIKAFLEX 1CSL (OR APPROVED EQUAL)). ALL SEALANTS SHALL BE INSTALLED IN ACCORDANCE WITH MANUFACTURER SPECIFICATIONS.

N. EARTHWORK

1. SOIL DESIGNATED AS UNSUITABLE (E.G. TOPSOIL) SHALL BY NO MEANS BE USED AS FILL MATERIAL. ALL EXCAVATION AND EMBANKMENT CONSTRUCTION SHALL BE IN ACCORDANCE WITH ODOT CMS 203/204 AND THE PROJECT DOCUMENTS. ALL EARTHWORK SHALL ALSO BE IN DIRECT ACCORDANCE WITH OSHA REQUIREMENTS. TEMPORARY SHORING, TRENCH BOXES, SUMP PUMPS, BORING/JACKING, UNDERPINNING, TIEBACKS, ETC. SHALL BE DESIGNED BY CONTRACTOR AND USED DURING CONSTRUCTION AS REQUIRED.
2. THE CERTIFIED TESTING AGENCY SHALL VERIFY ALL SUBGRADES HAVE BEEN COMPACTED TO AT LEAST 98% OF THE MATERIAL'S MAXIMUM DRY DENSITY (OBTAINED IN ACCORDANCE WITH ASTM STANDARD METHOD D-698), ARE NOT FROZEN, HAVE ALLOWABLE BEARING CAPACITIES OF NO LESS THAN 2500/3000 PSF, AND ARE NEAR OPTIMUM MOISTURE CONTENT (+2%/-3%). IF REQUIRED, THE AGENCY'S GEOTECHNICAL ENGINEER SHALL ALSO RECOMMEND THE LIMITS OF ADDITIONAL EXCAVATION. ALL SUBGRADES SHALL BE INSPECTED BY THE OWNER'S REPRESENTATIVE PRIOR TO PLACEMENT OF EMBANKMENT, AGGREGATE, CONCRETE, ASPHALT, ETC. THE UPPER 12" OF SUBGRADE SOILS DIRECTLY BELOW PAVEMENT BASE STONE SHALL HAVE 100% COMPACTION. IF UNSUITABLE MATERIAL IS FOUND AT THE DRAWING SUBGRADE DEPTHS, ADDITIONAL EXCAVATION SHALL BE REQUIRED UNTIL SUITABLE BASES ARE ENCOUNTERED. ADDITIONAL EXCAVATIONS ARE TO BE BACKFILLED WITH PROPERLY COMPACTED ENGINEERED (CONTROLLED) FILL OR AGGREGATE BASE MATERIAL. THE AGGREGATE BASE SHALL BE PLACED ON A SUBGRADE PROPERLY PREPARED IN ACCORDANCE WITH ODOT CMS 204. ALL AGGREGATE BASE SHALL BE PLACED AND COMPACTED IN ACCORDANCE WITH ODOT CMS 304. UNLESS NOTED OTHERWISE, AGGREGATE BASE SHALL BE PLACED IN MAXIMUM 6" COMPACTED DEPTH LIFTS AND COMPACTED TO AT LEAST 100% PER ASTM D-698 AT OPTIMUM MOISTURE CONTENT. ALTERNATE METHODS AND MATERIALS CORRESPONDING TO SUBGRADE PREPARATION MAY BE REQUIRED DURING CONSTRUCTION. ALTERNATE METHODS MUST BE APPROVED BY THE ENGINEER.
3. FILL MATERIAL SHALL BE FREE FROM BRICKS, HARDENED CONCRETE, AND SOIL THAT ARE CONTAMINATED WHICH MAY LEAD TO LEACHING OF CONSTITUENTS TO WATERS OF THE STATE.
4. THE BID SUM SHALL INCLUDE ALL EARTHWORK AS REQUIRED TO COMPLETE THE PROJECT IN ACCORDANCE WITH THE PROJECT DOCUMENTS. TO THE BEST OF THE ENGINEER'S KNOWLEDGE, A SUBSURFACE INVESTIGATION HAS NOT BEEN CONDUCTED AND A SOILS REPORT HAS NOT BEEN PREPARED FOR THE SITE.
5. EXCESS EXCAVATION SHALL BE DISPOSED OF OFF-SITE AND IN A MANNER THAT IS IN ACCORDANCE WITH ANY APPROPRIATE GOVERNING AUTHORITY.
6. IF IT IS NECESSARY FOR ANY EXCAVATION TO BE DEWATERED, IT WILL BE THE CONTRACTOR'S RESPONSIBILITY TO DEWATER SAID EXCAVATION IN ACCORDANCE WITH ALL APPROPRIATE LAWS AND REGULATIONS AT NO ADDITIONAL EXPENSE TO THE OWNER.

O. SANITARY SEWER

1. SANITARY SEWER SHALL BE ASTM D3034, SDR26 GRAVITY SEWER PIPING. PIPE, JOINTS, AND INSTALLATION SHALL BE IN CONFORMANCE WITH OHIO EPA PIPE SPECIFICATIONS INCLUDING JOINTS MEETING ASTM D3212 SPECS AND INSTALLATION FOLLOWING ASTM D2321. IN ADDITION, CONTRACTOR SHALL FOLLOW OHIO DEPARTMENT OF TRANSPORTATION CONSTRUCTION AND MATERIAL SPECIFICATIONS FOR TYPE B CONDUIT (STORM OR SANITARY SEWERS UNDER PAVEMENT)
2. ANY UTILITY CROSSINGS LOCATED AND REQUIRING REMOVAL DURING EXCAVATION AND PLACEMENT OF TRENCH SHIELDING SHALL BE REPLACED IN ACCORDANCE WITH NOTES ON PLANS.
3. BYPASS PUMPING SHALL BE INCLUDED INTO PROJECT BIDDING TO ACCOMMODATE A BASE FLOW OF 200,000 GALLONS PER DAY.
4. IF BYPASS LINE CROSSES A STREET THAT IS TO REMAIN OPEN, USE OF HOSE PROTECTOR RAMPS CAPABLE OF PROTECTING GREATER THAN OR EQUAL TO 4" DIAMETER HOSES/PIPES IS RECOMMENDED. CHANNELS SHALL BE STACKED END TO END TO ACCOMMODATE FULL WIDTH OF ROAD.

P. MANHOLE REHABILITATION

1. MANHOLES SHALL BE LINED TO MINIMIZE I&I INTO THE SYSTEM.
2. LINING SYSTEM TO BE INSTALLED SHALL BE AN EPOXY-BASED SYSTEM (EPOXYTECH UROFLEX OR APPROVED EQUAL) ABOVE TO EXHIBIT HIGH CHEMICAL CORROSION RESISTANCE (H2S), EXCELLENT SEAL PROTECTION, AND PROVIDE BUILD-UP PROTECTION.
3. LINING SYSTEM MAY BE SPRAY-APPLIED OR HAND-APPLIED.
4. LINING INSTALLATION SHALL BE COMPLETED AFTER ADJUSTMENT OF MANHOLE INVERTS TO SEAL NEW MANHOLE FLOW CHANNELS/BASES.
5. CONTRACTOR SHALL ADHERE TO ALL MANUFACTURER SPECIFICATIONS FOR SURFACE PREPARATION, INSTALLATION PROCEDURES, AND OTHER SPECIFICATIONS.

PICKERING ASSOCIATES
Architects • Engineers • Surveyors
11283 Emerson Avenue
Parkersburg, West Virginia 26104
Phone: (304) 464-5305
Fax: (304) 464-4428

Rev.	Description	By	Date
0	ISSUED FOR BID/CONSTRUCTION	JRB	04/07/21

Drawing Description
ATHENS CO. COMMISSIONERS / HAPCAP / VIL. OF CHAUNCEY
OHIO
CHAUNCEY SEWER FACILITY IMPROVEMENTS
CONVERSE STREET, CHAUNCEY, OHIO
GENERAL NOTES

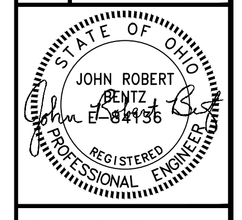

Project: 2202052
Designed By: JRB
Drawn By: JRB
Approved By: JRB
Scale: NA
Plot Date: 04/07/21
Revision: 0
Drawing Number:
C000

NOTES:
1. PROJECT EXTENTS RUN FROM MH1 TO MH4.
2. CONTRACTOR TO SUPPLY BYPASS PUMPING SCHEDULE AND PLAN TO ENGINEER FOR REVIEW.
3. DESIGN FLOW FOR BYPASS PUMPING: 200,000gpd

MASTER PLAN

SCALE: 1"=50'

Drawing Number: C100

Revision: 0

Plot Date: 04/07/21

Scale: AS NOTED

Checked By: JRB

Drawn By: JRB

Designed By: JRB

Project: 2202052

STATE OF OHIO — JOHN ROBERT BENTZ — REGISTERED PROFESSIONAL ENGINEER — E-84936

Drawing Description

ATHENS COUNTY COMMISSIONERS

CHAUNCEY, OHIO

VILLAGE OF CHAUNCEY, C.I. (SEWER IMPROVEMENTS)

MASTER PLAN

Rev.	Description	By	Date
0	ISSUED FOR BID/CONSTRUCTION	JRB	04/07/21

PICKERING ASSOCIATES
Architects • Engineers • Surveyors
11283 Emerson Avenue
Parkersburg, WV 26104
Phone: (304) 464-5305
Fax: (304) 464-4428

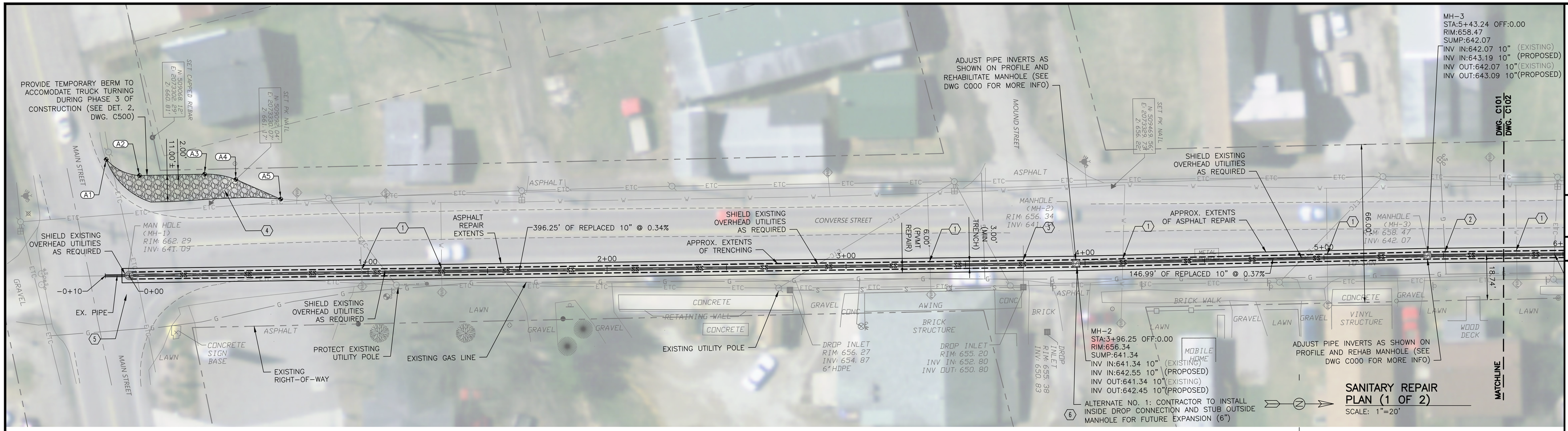

SANITARY REPAIR PLAN (1 OF 2)
SCALE: 1"=20'

CODED NOTES:
1. CONTRACTOR SHALL ACKNOWLEDGE EXISTING WATER SERVICE LINES. IF PORTION OF LINE IS REMOVED FOR EASE OF CONSTRUCTION, LINE SHALL BE SPLICED AND SERVICE REINSTATED UPON COMPLETION OF PIPE BACKFILL. WORK SHALL BE COMPLETED AS TO MINIMIZE DOWNTIME FOR RESIDENTIAL WATER SUPPLY. CONTRACTOR SHALL COORDINATE WITH VILLAGE FOR RESIDENTIAL INTERRUPTIONS.
2. CONTRACTOR SHALL COORDINATE WITH GAS COMPANY FOR CROSSING GAS LINES.
3. STORM SEWERS REMOVED FROM SERVICE TO ACCOMMODATE CONSTRUCTION SHALL BE REPAIRED USING FERNCO ADAPTERS FOR APPROPRIATE PIPE TYPES AND ACCOMODATE SDR35 SPLICES.
4. BERM TO ACCOMMODATE CONSTRUCTION DURING INTERSECTION WORK. OTHER MEANS OF ACCOMMODATION MAY BE PROPOSED BY CONTRACTOR AT NO ADDITIONAL COSTS TO OWNER. BERM SHALL BE REMOVED AND RETURNED TO EXISTING CONDITION PRIOR TO CLOSEOUT.
5. DUE TO TRAFFIC VOLUMES, STRONG CONSIDERATIONS SHALL BE GIVEN TO PERFORMING PHASE 3 (STA. 0+00 TO 3+96.25) WITH NIGHTTIME OPERATIONS.
6. SEE DETAIL 6 ON DRAWING C500 FOR ALTERNATE NO. 1: INTERNAL DROP CONNECTION FOR MANHOLE AT MOUND STREET INTERSECTION.

NOTES:
1. CONTRACTOR SHALL SUPPORT AND PROTECT EXISTING UTILITIES AS NECESSARY DURING TRENCH EXCAVATION AND PIPE REPLACEMENT.
2. CONTRACTOR SHALL REPLACE ANY DESTROYED OR REMOVED PAVEMENT MARKINGS (EDGE LINES, ETC) UPON CONSTRUCTION COMPLETION.
3. SEWER REPLACEMENT, INCLUDING PIPING AND JOINTS, SHALL CONFORM TO OHIO EPA STANDARDS. PIPE SHALL BE 10" DIAMETER SDR 26 GRAVITY SEWER PIPE CONFORMING TO ASTM D3034 WITH ASTM D3212 JOINTS.
4. EXISTING UTILITIES ARE APPROXIMATE AS PROVIDED BY COMPANIES PRIOR TO SURVEY. CONTRACTOR SHALL FIELD VERIFY ALL UTILITIES WITHIN PROJECT AREA. IF DISCREPANCY IN UNDERGROUND UTILITY IS DISCOVERED, ENGINEER SHALL BE NOTIFIED IMMEDIATELY.
5. CONTRACTOR SHALL COORDINATE WITH RESPECTIVE OVERHEAD UTILITY COMPANIES TO SHIELD WIRES, AS REQUIRED, FOR WORKER SAFETY.
6. CONTRACTOR SHALL REFER TO DRAWINGS C103 AND C104 FOR TRAFFIC CONTROL MEASURES. ATLEAST ONE LANE OF TRAFFIC MUST BE MAINTAINED AT ALL TIMES DURING CONSTRUCTION.
7. ALL SEDIMENT AND EROSION CONTROL MEASURES SHALL BE IN DIRECT ACCORDANCE WITH THE OHIO RAINWATER AND LAND DEVELOPMENT MANUAL, THE NPDES PERMIT, THE PROJECT DOCUMENTS, AND AUTHORITIES HAVING JURISDICTION REQUIREMENTS. FILTER SOCKS SHALL BE USED TO MINIMIZE SEDIMENT RUNOFF FROM WORK AREA.
8. THE CONTRACTOR SHALL BE RESPONSIBLE FOR ENSURING POSITIVE DRAINAGE (NO STANDING WATER) IS ATTAINED THROUGHOUT AND UPON COMPLETION OF THE PROJECT INCLUDING TEMPORARY STORM PUMPING, IF REQUIRED..
9. MEASURES SHALL BE PUT INTO PLACE TO ACCOMMODATE RESIDENTIAL PARKING DURING CONSTRUCTION.
10. STEEL PLATES SHALL BE PUT IN PLACE TO PROTECT ANY TRENCHES LEFT OPEN AT THE CONCLUSION OF CONSTRUCTION ACTIVITIES FOR ANY GIVEN DAY.

SEWER REPAIR CENTERLINE PROFILE

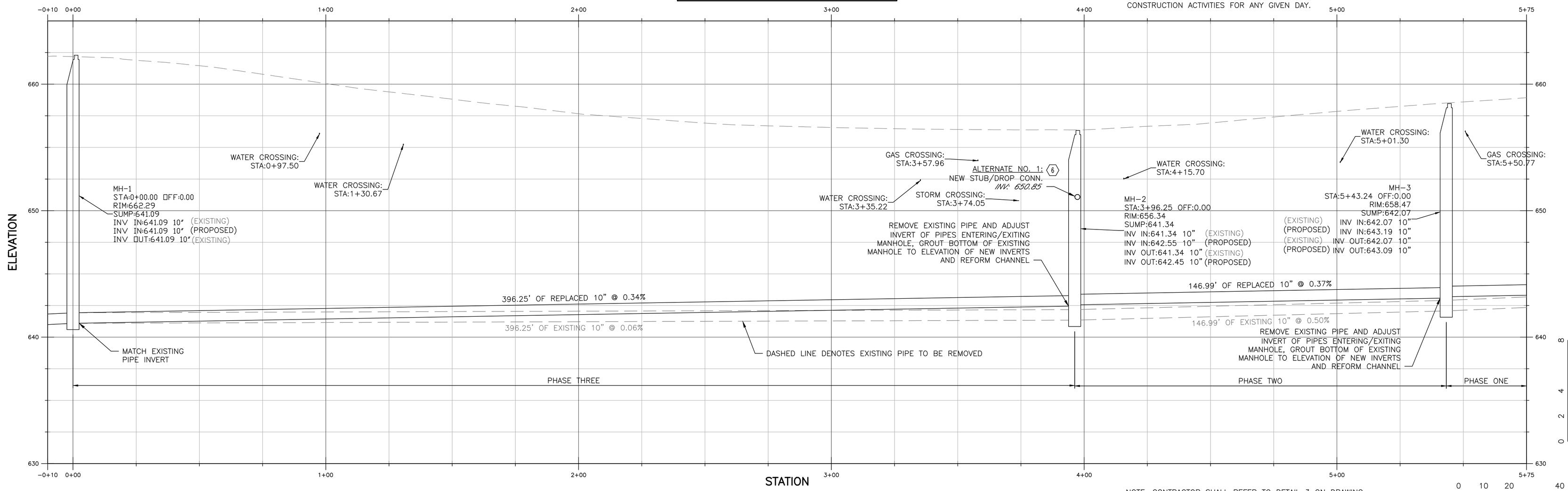

NOTE: CONTRACTOR SHALL REFER TO DETAIL 3 ON DRAWING C500 FOR GROUTING OF EXISTING MANHOLES TO ACCOMODATE NEW INVERTS

PICKERING ASSOCIATES
Architects • Engineers • Surveyors
11283 Emerson Avenue
Parkersburg, WV 26104
Phone: (304) 464-5305
Fax: (304) 464-4428

Rev.	Description	By	Date
0	ISSUED FOR BID/CONSTRUCTION	JRB	04/07/21

Drawing Description
ATHENS COUNTY COMMISSIONERS
VILLAGE OF CHAUNCEY (SEWER FACILITY REPAIRS)
CHAUNCEY, OHIO
SANITARY REPAIR PLAN AND PROFILE (1 OF 2)

STATE OF OHIO
JOHN ROBERT BENTZ
E-64136
REGISTERED PROFESSIONAL ENGINEER

Project: 2202052
Designed By: JRB
Drawn By: JRB
Checked By: JRB
Scale: AS NOTED
Plot Date: 04/07/21
Revision: 0
Drawing Number:
C101

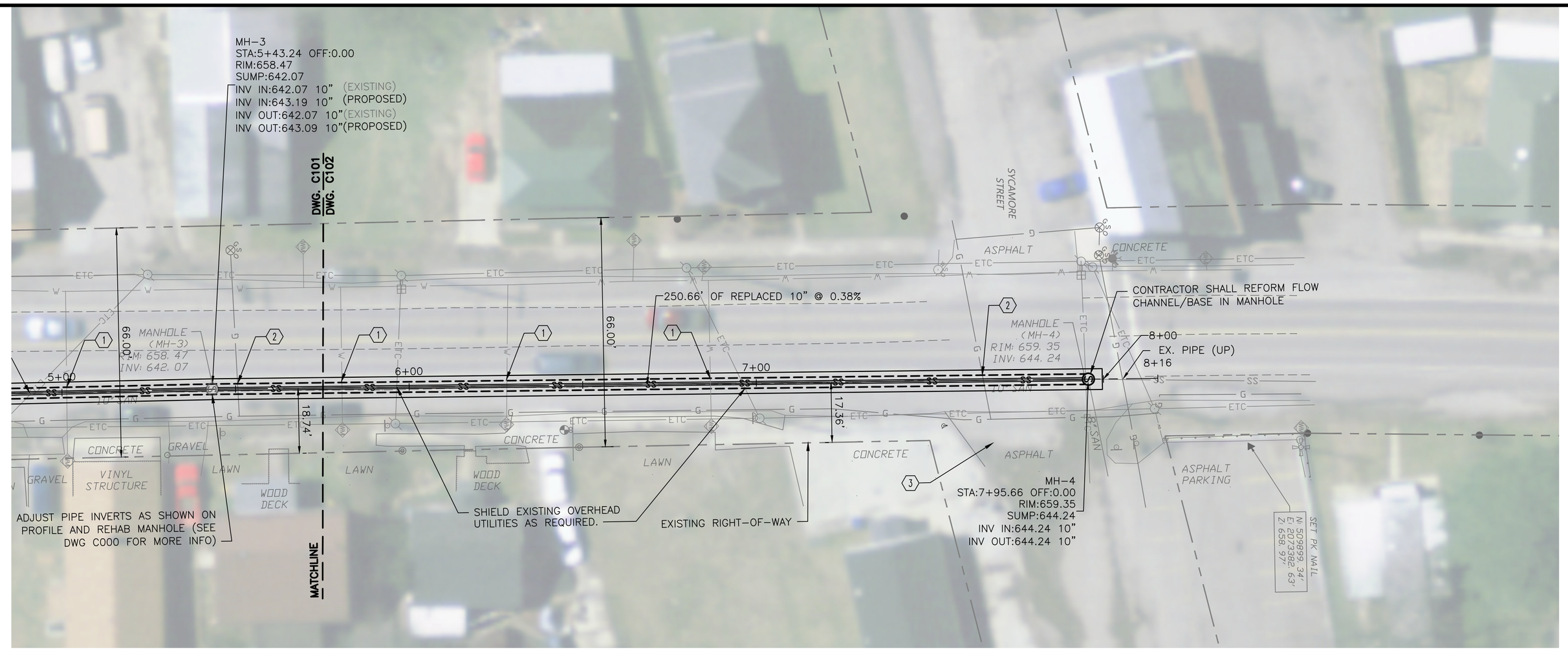

SANITARY REPAIR PLAN (2 OF 2)

SCALE: 1"=20'

SEWER REPAIR CENTERLINE PROFILE

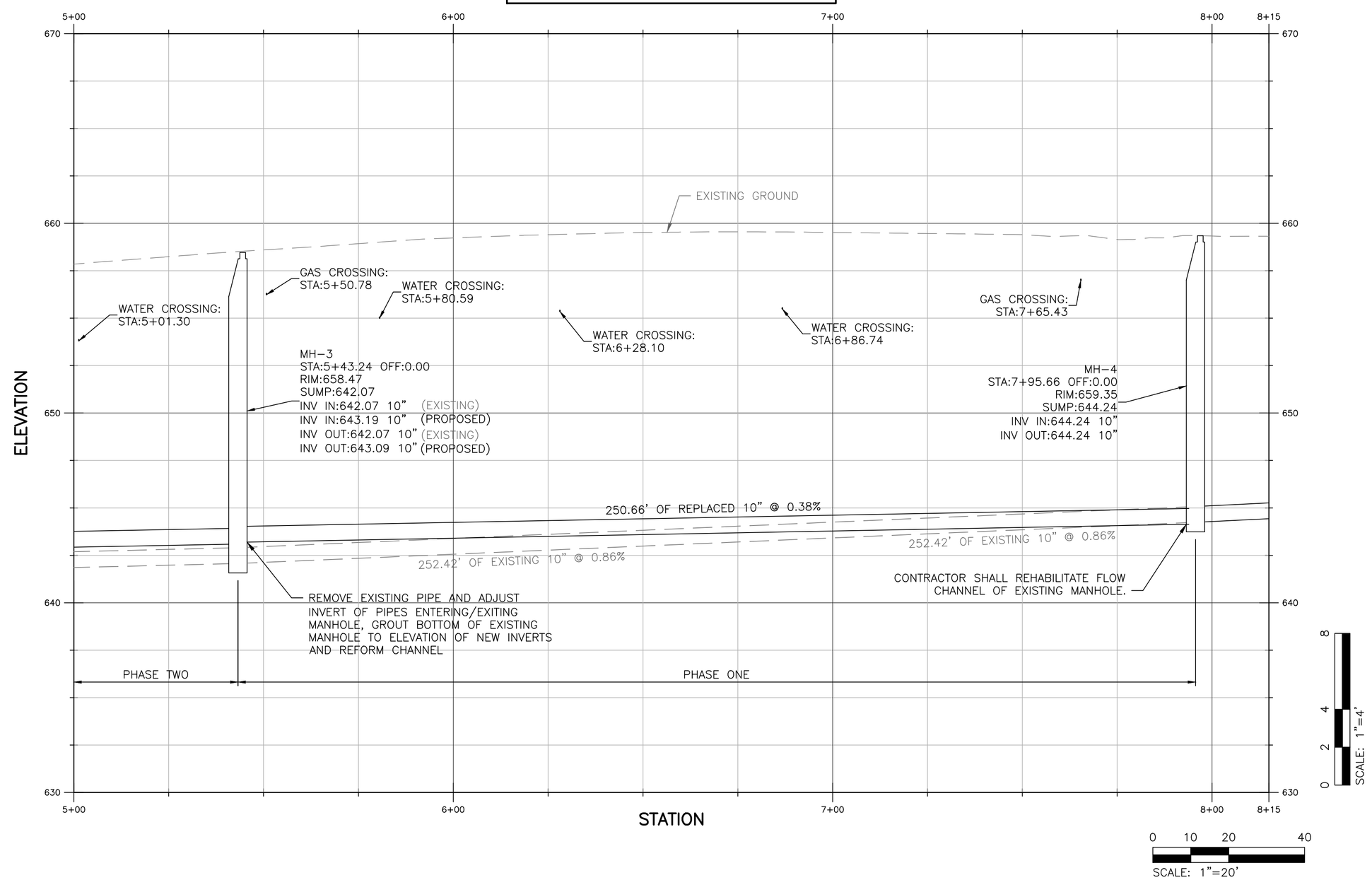

NOTES:
1. CONTRACTOR SHALL SUPPORT AND PROTECT EXISTING UTILITIES AS NECESSARY DURING TRENCH EXCAVATION AND PIPE REPLACEMENT.
2. CONTRACTOR SHALL REPLACE ANY DESTROYED OR REMOVED PAVEMENT MARKINGS (EDGE LINES, ETC) TO ODOT AND MUTCD STANDARDS UPON CONSTRUCTION COMPLETION.
3. SEWER REPLACEMENT, INCLUDING PIPING AND JOINTS, SHALL CONFORM TO OHIO EPA STANDARDS. PIPE SHALL BE 10" DIAMETER SDR 26 GRAVITY SEWER PIPE CONFORMING TO ASTM D3034 WITH ASTM D3212 JOINTS.
4. EXISTING UTILITIES ARE APPROXIMATE AS PROVIDED BY COMPANIES PRIOR TO SURVEY. CONTRACTOR SHALL FIELD VERIFY ALL UTILITIES WITHIN PROJECT AREA. IF DISCREPANCY IN UNDERGROUND UTILITY IS DISCOVERED, ENGINEER SHALL BE NOTIFIED IMMEDIATELY.
5. CONTRACTOR SHALL COORDINATE WITH RESPECTIVE OVERHEAD UTILITY COMPANIES TO SHIELD WIRES, AS REQUIRED, FOR WORKER SAFETY.
6. CONTRACTOR SHALL REFER TO DRAWINGS C103 AND C104 FOR TRAFFIC CONTROL MEASURES. ATLEAST ONE LANE OF TRAFFIC MUST BE MAINTAINED AT ALL TIMES DURING CONSTRUCTION.
7. ALL SEDIMENT AND EROSION CONTROL MEASURES SHALL BE IN DIRECT ACCORDANCE WITH THE OHIO RAINWATER AND LAND DEVELOPMENT MANUAL, THE NPDES PERMIT, THE PROJECT DOCUMENTS, AND AUTHORITIES HAVING JURISDICTION REQUIREMENTS. FILTER SOCKS SHALL BE USED TO MINIMIZE SEDIMENT RUNOFF FROM WORK AREA.
8. THE CONTRACTOR SHALL BE RESPONSIBLE FOR ENSURING POSITIVE DRAINAGE (NO STANDING WATER) IS ATTAINED THROUGHOUT AND UPON COMPLETION OF THE PROJECT INCLUDING TEMPORARY STORM PUMPING, IF REQUIRED.
9. MEASURES SHALL BE PUT INTO PLACE TO ACCOMMODATE RESIDENTIAL PARKING DURING CONSTRUCTION.
10. STEEL PLATES SHALL BE PUT IN PLACE TO PROTECT ANY TRENCHES LEFT OPEN AT THE CONCLUSION OF CONSTRUCTION ACTIVITIES FOR ANY GIVEN DAY.

CODED NOTES:
1. CONTRACTOR SHALL ACKNOWLEDGE EXISTING WATER SERVICE LINES. IF PORTION OF LINE IS REMOVED TO ACCOMMODATE CONSTRUCTION, LINE SHALL BE SPLICED AND SERVICE REINSTATED UPON COMPLETION OF PIPE BACKFILL. WORK SHALL BE COMPLETED AS TO MINIMIZE DOWNTIME FOR RESIDENTIAL WATER SUPPLY. CONTRACTOR SHALL COORDINATE WITH VILLAGE FOR RESIDENTIAL INTERRUPTIONS.
2. CONTRACTOR SHALL COORDINATE WITH GAS COMPANY FOR CROSSING GAS LINES.
3. CONTRACTOR SHALL PROVIDE BYPASS PLAN FOR REVIEW AND APPROVAL. BASIS OF BYPASS FLOW: 200,000 GPD
4. SYCAMORE STREET SHALL HAVE PROPER SIGNAGE FOR CLOSURE DURING TRENCHING OPERATIONS. BYPASS LINE SHALL BE PROTECTED FROM VEHICLES AT ALL TIMES. FOR ROAD CROSSINGS, CONTRACTOR SHALL USE HOSE PROTECTOR RAMPS CAPABLE OF PROTECTING GREATER THAN OR EQUAL TO 4" DIAMETER HOSES/PIPES FOR BYPASS PROTECTION. CHANNELS SHALL BE STACKED END TO END TO ACCOMMODATE FULL WIDTH OF ROAD. CONTRACTOR SHALL PROVIDE SUBMITTAL.

PICKERING ASSOCIATES
Architects • Engineers • Surveyors
11283 Emerson Avenue
Parkersburg, WV 26104
Phone: (304) 464-5305
Fax: (304) 464-4428

Rev.	Description	By	Date
0	ISSUED FOR BID/CONSTRUCTION	JRB	04/07/21

Drawing Description

ATHENS COUNTY COMMISSIONERS
CHAUNCEY, OHIO
VILLAGE OF CHAUNCEY, C.I. (SEWER IMPROVEMENTS)
SANITARY REPAIR PLAN AND PROFILE (SHEET 2 OF 2)

STATE OF OHIO
JOHN ROBERT BENTZ
PROFESSIONAL ENGINEER
REGISTERED
E-64136

Project: 2202052
Designed By: JRB
Drawn By: JRB
Checked By: JRB
Scale: AS NOTED
Plot Date: 04/07/21
Revision: 0
Drawing Number:
C102

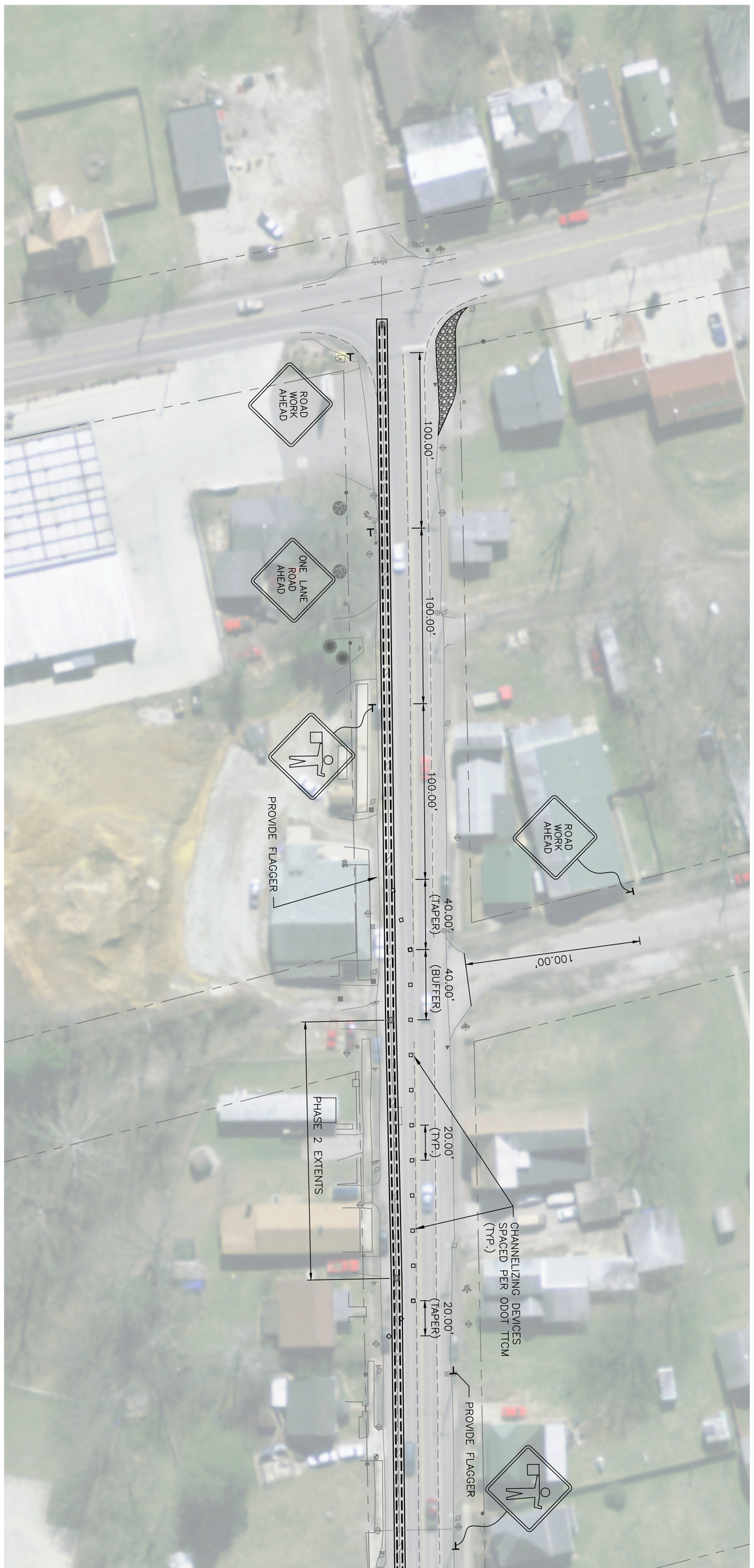

NOTES:
1. PLAN PROVIDES SUGGESTED METHOD FOR TRAFFIC CONTROL FOR PHASES OF PROJECT. CONTRACTOR SHALL SUBMIT TRAFFIC CONTROL PLAN TO ENGINEER FOR APPROVAL IF DEVIATES FROM THIS PLAN. PLAN MAY BE ADJUSTED IN REGARDS TO WORK ZONE LENGTH AS CONTRACTOR SEES FIT, IF THE INTENT OF SIGNAGE IS MAINTAINED.
2. CONTRACTOR SHALL WORK WITH VILLAGE ADMINISTRATOR TO DETERMINE IF/WHEN SYCAMORE STREET SHALL BE CLOSED DURING PORTIONS OF CONSTRUCTION. BYPASS PUMPING LINES, CROSSING SYCAMORE STREET, SHALL BE PROTECTED FROM TRAFFIC WITH APPROPRIATE CABLE PROTECTION METHODS. ALL MEANS OF SIGNAGE SHALL BE INCLUDED WITH BID.
3. ALL TRAFFIC CONTROL DEVICES SHALL BE IN CONFORMANCE WITH OHIO DOT TEMPORARY TRAFFIC CONTROL MANUAL AND THE MUTCD.
4. CONTRACTOR SHALL MAKE EVERY ATTEMPT POSSIBLE TO ACCOMMODATE LOCAL RESIDENTS, DURING CONSTRUCTION, DUE TO ON-STREET PARKING.
5. ALL DRIVEWAYS AND RESIDENTIAL PARKING SHALL BE ACCOMMODATED DURING CONSTRUCTION, INCLUDING ROAD PLATING, GAPS IN STOCKPILES, BYPASS PUMPING, ETC.

PHASE 2 TRAFFIC CONTROL PLAN

SCALE: 1"=40'

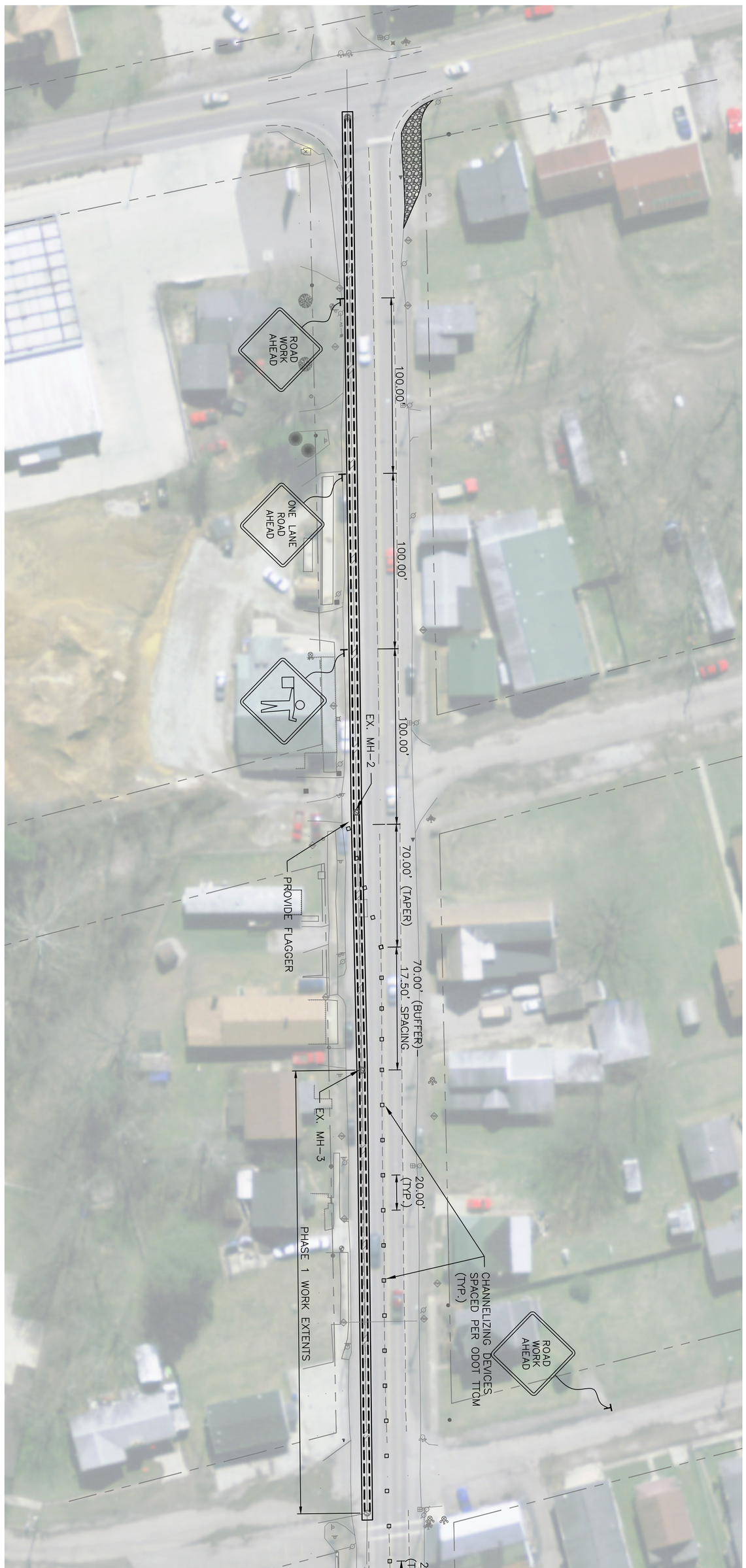

NOTES:
1. PLAN PROVIDES SUGGESTED METHOD FOR TRAFFIC CONTROL FOR PHASES OF PROJECT. CONTRACTOR SHALL SUBMIT TRAFFIC CONTROL PLAN TO ENGINEER FOR APPROVAL IF DEVIATES FROM THIS PLAN. PLAN MAY BE ADJUSTED IN REGARDS TO WORK ZONE LENGTH AS CONTRACTOR SEES FIT, IF THE INTENT OF SIGNAGE IS MAINTAINED.
2. CONTRACTOR SHALL WORK WITH VILLAGE ADMINISTRATOR TO DETERMINE IF/WHEN SYCAMORE STREET SHALL BE CLOSED DURING PORTIONS OF CONSTRUCTION. BYPASS PUMPING LINES, CROSSING SYCAMORE STREET, SHALL BE PROTECTED FROM TRAFFIC WITH APPROPRIATE CABLE PROTECTION METHODS. ALL MEANS OF SIGNAGE SHALL BE INCLUDED WITH BID.
3. ALL TRAFFIC CONTROL DEVICES SHALL BE IN CONFORMANCE WITH OHIO DOT TEMPORARY TRAFFIC CONTROL MANUAL AND THE MUTCD.
4. CONTRACTOR SHALL MAKE EVERY ATTEMPT POSSIBLE TO ACCOMMODATE LOCAL RESIDENTS, DURING CONSTRUCTION, DUE TO ON-STREET PARKING.
5. ALL DRIVEWAYS AND RESIDENTIAL PARKING SHALL BE ACCOMMODATED DURING CONSTRUCTION, INCLUDING ROAD PLATING, GAPS IN STOCKPILES, BYPASS PUMPING, ETC.

PHASE 1 TRAFFIC CONTROL PLAN

SCALE: 1"=40'

Rev.	Description	By	Date
0	ISSUED FOR BID/CONSTRUCTION	JRB	04/07/21

Drawing Description

ATHENS COUNTY COMMISSIONERS

CHAUNCEY, OHIO

VILLAGE OF CHAUNCEY, C.I. (SEWER IMPROVEMENTS)

TRAFFIC CONTROL PLANS (SHEET 1 OF 2)

STATE OF OHIO — JOHN ROBERT BENTZ — E-84496 — REGISTERED PROFESSIONAL ENGINEER

Project: 2202052

Designed By: JRB

Drawn By: JRB

Checked By: JRB

Scale: AS NOTED

Plot Date: 04/07/21

Revision: 0

Drawing Number: C103

PICKERING ASSOCIATES
Architects • Engineers • Surveyors
11283 Emerson Avenue
Parkersburg, WV 26104
Phone: (304) 464-5305
Fax: (304) 464-4428

NOTES:
1. PLAN PROVIDES SUGGESTED METHOD FOR TRAFFIC CONTROL FOR PHASES OF PROJECT. CONTRACTOR SHALL SUBMIT TRAFFIC CONTROL PLAN TO ENGINEER FOR APPROVAL IF DEVIATES FROM THIS PLAN.
2. DUE TO TRAFFIC VOLUMES AT THE INTERSECTION OF MAIN STREET AND CONVERSE STREET, ALL REASONABLE EFFORTS SHALL BE MADE TO PERFORM WORK DURING NIGHTTIME HOURS.
3. DUE TO ANTICIPATED QUEUE LENGTHS, TRAFFIC FLAGGING SHALL REMAIN ALONG MAIN STREET UNTIL THE INTERSECTION WOULD NOT BE BLOCKED BY STOPPED TRAFFIC. BARRICADE LOCATIONS SHALL BE ADJUSTED ACCORDINGLY ONCE IMMEDIATE WORK WITHIN THE INTERSECTION IS COMPLETE, TO BETTER ACCOMMODATE TRUCK TURNING.
4. CONTRACTOR SHALL MAKE EVERY ATTEMPT POSSIBLE TO ACCOMMODATE LOCAL RESIDENTS, DURING CONSTRUCTION, DUE TO ON-STREET PARKING, INCLUDING ROAD PLATING, GAPS IN STOCKPILES, AND BYPASS PUMPING.

N

PHASE 3 TRAFFIC CONTROL PLAN

SCALE: 1"=40'

Drawing Description

ATHENS COUNTY COMMISSIONERS

CHAUNCEY, OHIO

VILLAGE OF CHAUNCEY, C.I. (SEWER IMPROVEMENTS)

TRAFFIC CONTROL PLANS (SHEET 2 OF 2)

Rev.	Description	By	Date
0	ISSUED FOR BID/CONSTRUCTION	JRB	04/07/21

Project: 2202052

Designed By: JRB

Drawn By: JRB

Checked By: JRB

Scale: AS NOTED

Plot Date: 04/07/21

Revision: 0

Drawing Number: C104

STATE OF OHIO — JOHN ROBERT BENTZ — E-84436 — REGISTERED PROFESSIONAL ENGINEER

PICKERING ASSOCIATES
Architects • Engineers • Surveyors
11283 Emerson Avenue
Parkersburg, WV 26104
Phone: (304) 464-5305
Fax: (304) 464-4428

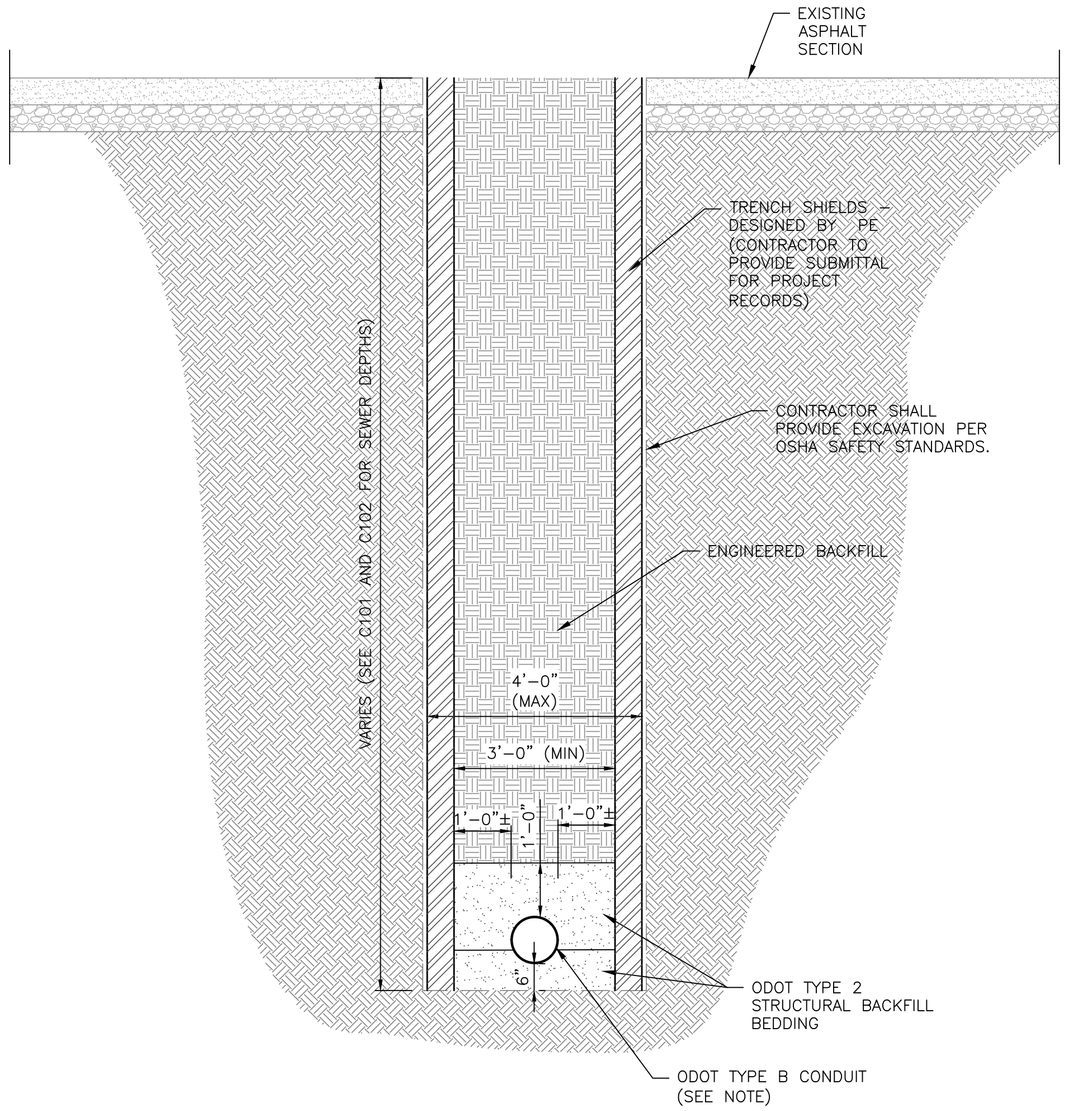

TYPICAL TRENCH DETAIL (SANITARY REPAIR)

1 / C500 SCALE: 1/2"=1'-0"

NOTES:
1. TYPE B CONDUIT SHALL BE 10" ASTM D3034 SDR26 GASKETED INTEGRAL BELL PVC GRAVITY SEWER PIPE.

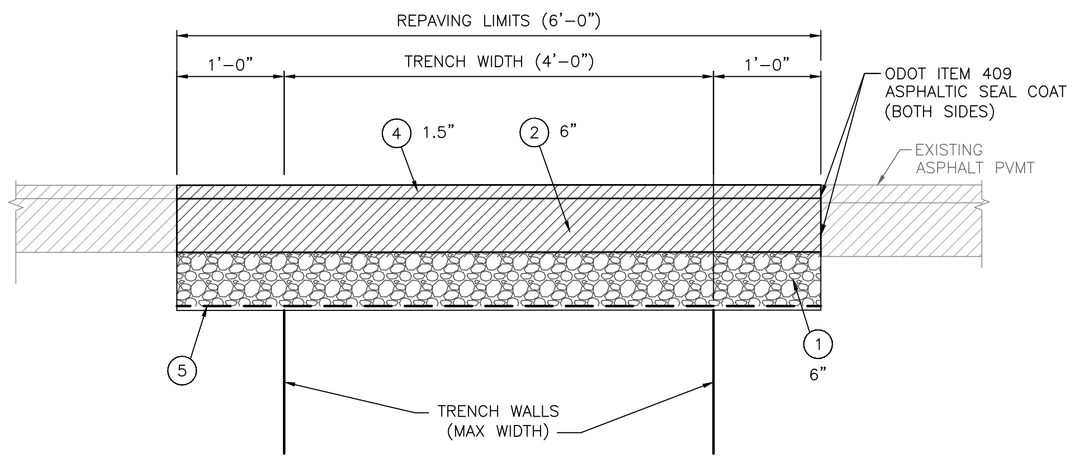

PAVEMENT REPAIR TRENCH SECTION

A / C500 SCALE: 1"=1'-0"

LEGEND

1. ITEM 304E20000, AGGREGATE BASE
2. ITEM 301E46000, ASPHALT CONCRETE BASE, PG64-22
3. NO. 2 CRUSHED LIMESTONE
4. ITEM 441E50000, ASPHALT CONCRETE SURFACE COURSE, TYPE 1 (448), PG64-22
5. ITEM 204E50000, GEOTEXTILE FABRIC, TYPE D
6. PROPERLY PREPARED SUBGRADE

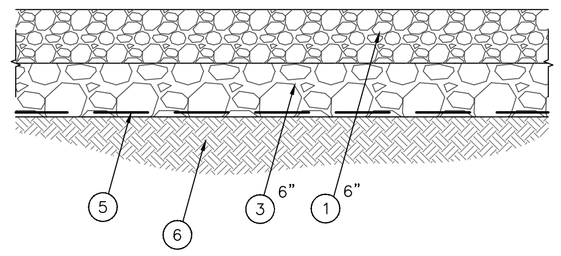

AGGREGATE BERM DETAIL

2 / C500 SCALE: 1"=1'-0"

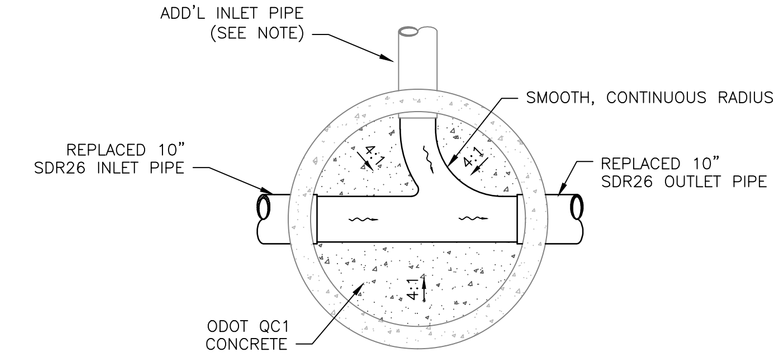

FLOW CHANNEL REHAB DETAIL

4 / C500 SCALE: 1/2"=1'-0"

NOTE:
1. CONTRACTOR SHALL FIELD VERIFY INCOMING PIPE SIZES AND ACCOMMODATE ALL WITH NEW CHANNEL

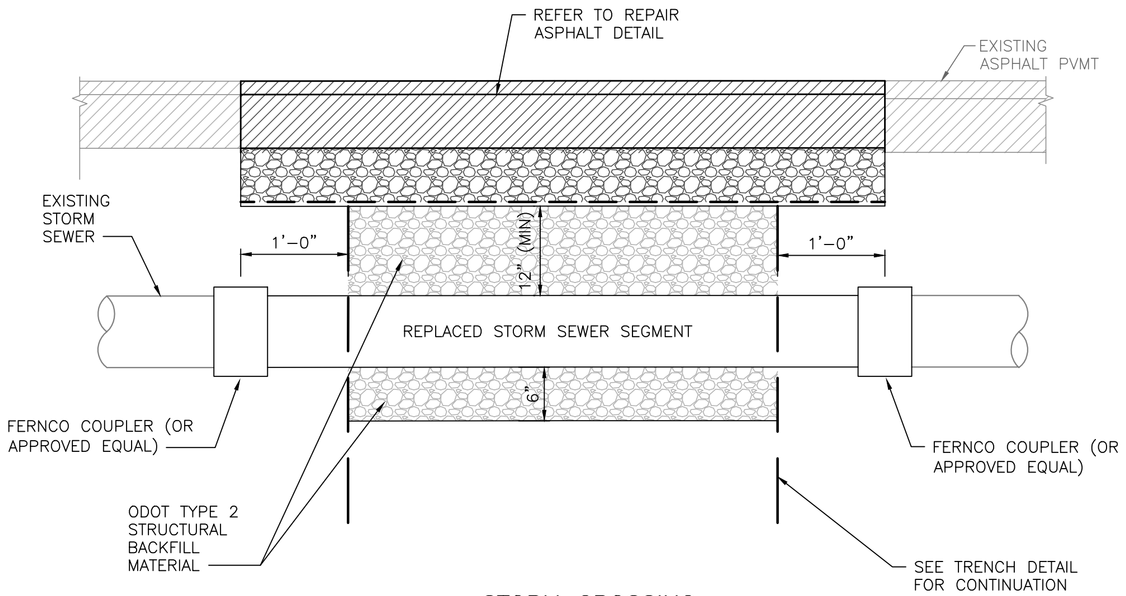

STORM CROSSING REPAIR SECTION

B / C500 SCALE: 1"=1'-0"

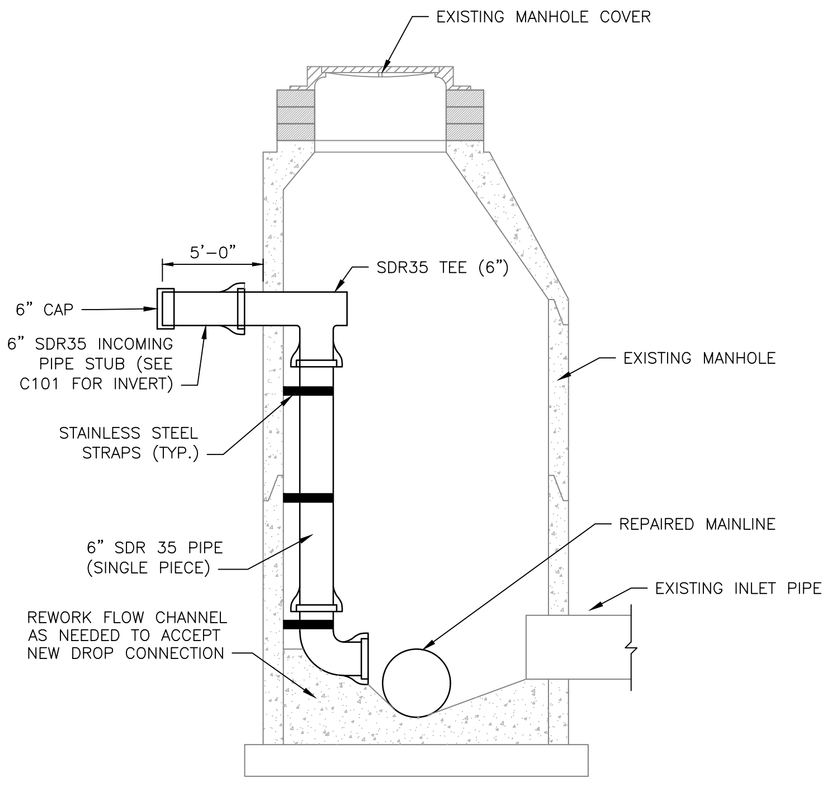

ALTERNATE NO. 1: INTERNAL DROP DETAIL

6 / C500 SCALE: 1/2"=1'-0"

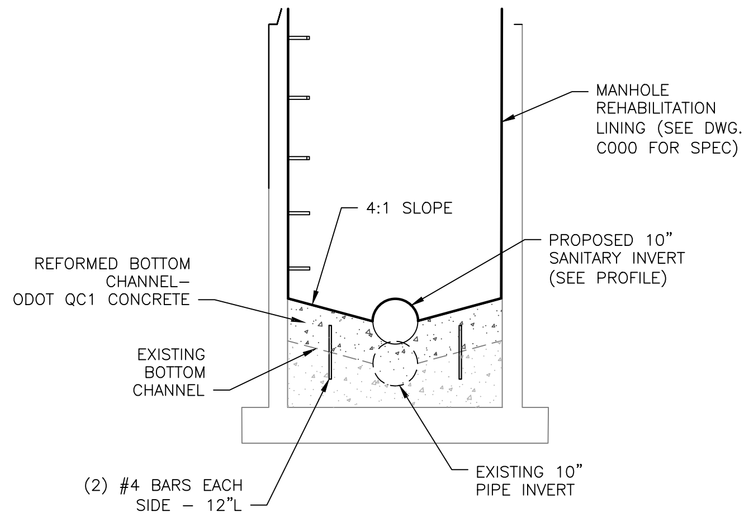

MANHOLE INVERT ADJUSTMENT DETAIL

3 / C500 SCALE: 1/2"=1'-0"

NOTE:
1. ADJUSTMENTS TO BOTTOM CHANNEL SHALL BE PERFORMED PRIOR TO LINING OF MANHOLE.

Location Info	
Location ID	605
Type	I-SECTION
Functional Class	4
Located On	CONVERSE ST
	SR13 CONVERSE N OF LEXINGTON AVE, IN CHAUNCEY
Direction	2-WAY
Community	CHAUNCEY
MPO_ID	
HPMS ID	
Agency	Ohio Department of Transportation

Count Data Info	
Start Date	8/27/2018
End Date	8/28/2018
Start Time	12:00 AM
End Time	12:00 AM
Direction	
Notes	
Count Source	
File Name	
Weather	
Study	
Owner	countelectronics
QC Status	Accepted

Interval: 15 mins					
Time	15 Min				Hourly Count
	1st	2nd	3rd	4th	
00:00 - 01:00	9	5	4	8	26
01:00 - 02:00	1	6	2	1	10
02:00 - 03:00	0	1	5	5	11
03:00 - 04:00	2	6	16	8	32
04:00 - 05:00	9	11	20	20	60
05:00 - 06:00	16	29	46	40	131
06:00 - 07:00	40	72	105	92	309
07:00 - 08:00	103	121	177	133	534
08:00 - 09:00	98	89	96	92	375
09:00 - 10:00	81	70	71	62	284
10:00 - 11:00	68	87	78	71	304
11:00 - 12:00	67	81	90	85	323
12:00 - 13:00	99	91	107	87	384
13:00 - 14:00	96	98	107	98	399
14:00 - 15:00	87	119	83	98	387
15:00 - 16:00	116	127	162	127	532
16:00 - 17:00	125	128	137	134	524
17:00 - 18:00	145	147	137	102	531
18:00 - 19:00	83	89	60	61	293
19:00 - 20:00	70	54	66	55	245
20:00 - 21:00	49	46	56	58	209
21:00 - 22:00	28	46	37	37	148
22:00 - 23:00	21	17	26	18	82
23:00 - 24:00	19	21	11	10	61
TOTAL					6194

Location Info	
Location ID	505
Type	I-SECTION
Functional Class	4
Located On	E MAIN ST
	SR13 MAIN E OF SR13 CONVERSE, IN CHAUNCEY
Direction	2-WAY
Community	CHAUNCEY
MPO_ID	
HPMS ID	
Agency	Ohio Department of Transportation

Count Data Info	
Start Date	9/19/2018
End Date	9/20/2018
Start Time	12:00 AM
End Time	12:00 AM
Direction	
Notes	
Count Source	
File Name	
Weather	
Study	
Owner	countelectronics
QC Status	Accepted

Interval: 15 mins					
Time	15 Min				Hourly Count
	1st	2nd	3rd	4th	
00:00 - 01:00	2	4	6	1	13
01:00 - 02:00	8	2	3	2	15
02:00 - 03:00	2	4	1	1	8
03:00 - 04:00	2	4	5	2	13
04:00 - 05:00	3	3	11	8	25
05:00 - 06:00	5	11	17	23	56
06:00 - 07:00	24	38	48	44	154
07:00 - 08:00	72	83	88	79	322
08:00 - 09:00	52	49	65	62	228
09:00 - 10:00	51	37	61	30	179
10:00 - 11:00	53	59	47	61	220
11:00 - 12:00	42	53	44	49	188
12:00 - 13:00	61	62	63	51	237
13:00 - 14:00	65	52	62	49	228
14:00 - 15:00	68	77	53	67	265
15:00 - 16:00	71	75	102	80	328
16:00 - 17:00	92	99	93	90	374
17:00 - 18:00	103	103	92	73	371
18:00 - 19:00	105	61	54	48	268
19:00 - 20:00	63	45	36	30	174
20:00 - 21:00	41	44	38	28	151
21:00 - 22:00	32	28	26	22	108
22:00 - 23:00	11	16	16	10	53
23:00 - 24:00	6	16	3	4	29
TOTAL					4007

TRAFFIC COUNT DETAIL (VIA ODOT TIMS)

5 / C500 SCALE: NTS

PICKERING ASSOCIATES
Architects • Engineers • Surveyors
11283 Emerson Avenue
Parkersburg, West Virginia 26104
Phone: (304) 464-5305
Fax: (304) 464-4428

Rev.	Description	By	Date
0	ISSUED FOR BID/CONSTRUCTION	JRB	04/07/21

Drawing Description

ATHENS COUNTY COMMISSIONERS
CHAUNCEY, OHIO
VILLAGE OF CHAUNCEY, C.I. (SEWER IMPROVEMENTS)
SECTIONS AND DETAILS

STATE OF OHIO
JOHN ROBERT BENTZ
E-64136
REGISTERED PROFESSIONAL ENGINEER

Project: 2202052
Designed By: JRB
Drawn By: JRB
Checked By: JRB
Scale: AS NOTED
Plot Date: 04/07/21
Revision: 0
Drawing Number: C500

DAVIS-BACON WAGE DETERMINATIONS

SECTION E

"General Decision Number: OH20210001 04/30/2021

Superseded General Decision Number: OH20200001

State: Ohio

Construction Types: Heavy and Highway

Counties: Ohio Statewide.

Heavy and Highway Construction Projects

Note: Under Executive Order (EO) 13658, an hourly minimum wage of $10.95 for calendar year 2021 applies to all contracts subject to the Davis-Bacon Act for which the contract is awarded (and any solicitation was issued) on or after January 1, 2015. If this contract is covered by the EO, the contractor must pay all workers in any classification listed on this wage determination at least $10.95 per hour (or the applicable wage rate listed on this wage determination, if it is higher) for all hours spent performing on the contract in calendar year 2021. If this contract is covered by the EO and a classification considered necessary for performance of work on the contract does not appear on this wage determination, the contractor must pay workers in that classification at least the wage rate determined through the conformance process set forth in 29 CFR 5.5(a)(1)(ii) (or the EO minimum wage rate,if it is higher than the conformed wage rate). The EO minimum wage rate will be adjusted annually. Please note that this EO applies to the above-mentioned types of contracts entered into by the federal government that are subject to the Davis-Bacon Act itself, but it does not apply to contracts subject only to the Davis-Bacon Related Acts, including those set forth at 29 CFR 5.1(a)(2)-(60). Additional information on contractor requirements and worker protections under the EO is available at www.dol.gov/whd/govcontracts.

Modification Number	Publication Date
0	01/01/2021
1	01/22/2021
2	02/12/2021
3	04/23/2021
4	04/30/2021

BROH0001-001 06/01/2019

DEFIANCE, FULTON (Excluding Fulton, Amboy & Swan Creek Townships), HENRY (Excluding Monroe, Bartlow, Liberty, Washington, Richfield, Marion, Damascus & Townships & that part of Harrison Township outside corporate limits of city of Napoleon), PAULDING, PUTNAM and WILLIAMS COUNTIES

	Rates	Fringes
Bricklayer, Stonemason	$ 29.34	16.11

BROH0001-004 06/01/2019

	Rates	Fringes
CEMENT MASON/CONCRETE FINISHER	$ 29.34	16.11

BROH0003-002 06/01/2019

FULTON (Townships of Amboy, Swan Creek & Fulton), HENRY (Townships of Washington, Damascus, Richfield, Bartlow, Liberty, Harrison, Monroe, & Marion), LUCAS and WOOD (Townships of Perrysburg, Ross, Lake, Troy, Freedom, Montgomery, Webster, Center, Portage, Middleton, Plain, Liberty, Henry, Washington, Weston, Milton, Jackson & Grand Rapids) COUNTIES

	Rates	Fringes
Bricklayer, Stonemason	$ 29.34	16.11

BROH0005-003 06/01/2020

CUYAHOGA, LORAIN & MEDINA (Hinckley, Granger, Brunswick, Liverpool, Montville, York, Homer, Harrisville, Chatham, Litchfield & Spencer Townships and the city of Medina)

	Rates	Fringes
BRICKLAYER		
BRICKLAYERS; CAULKERS; CLEANERS; POINTERS; & STONEMASONS	$ 36.64	17.13
SANDBLASTERS	$ 36.39	17.13

SEWER BRICKLAYERS & STACK BUILDERS	$ 36.64	17.13
SWING SCAFFOLDS	$ 37.14	17.13

BROH0006-005 06/01/2019

CARROLL, COLUMBIANA (Knox, Butler, West & Hanover Townships), STARK & TUSCARAWAS

	Rates	Fringes
Bricklayer, Stonemason	$ 29.34	16.11

BROH0007-002 06/01/2019

LAWRENCE

	Rates	Fringes
Bricklayer, Stonemason	$ 29.34	16.11

BROH0007-005 06/01/2019

PORTAGE & SUMMIT

	Rates	Fringes
BRICKLAYER	$ 29.34	16.11

BROH0007-010 06/01/2019

PORTAGE & SUMMIT

	Rates	Fringes
MASON - STONE	$ 29.34	16.11

BROH0008-001 06/01/2019

COLUMBIANA (Salem, Perry, Fairfield, Center, Elk Run, Middleton, & Unity Townships and the city of New Waterford), MAHONING & TRUMBULL

	Rates	Fringes

BRICKLAYER.....$ 29.34 16.11

BROH0009-002 06/01/2019

BELMONT & MONROE COUNTIES and the Townships of Warren & Mt. Pleasant and the Village of Dillonvale in JEFFERSON COUNTY

	Rates	Fringes
Bricklayer, Stonemason	$ 29.34	16.11
Refractory	$ 31.45	19.01

BROH0010-002 06/01/2019

COLUMBIANA (St. Clair, Madison, Wayne, Franklin, Washington, Yellow Creek & Liverpool Townships) & JEFFERSON (Brush Creek & Saline Townships)

	Rates	Fringes
Bricklayer, Stonemason	$ 29.34	16.11

BROH0014-002 06/01/2019

HARRISON & JEFFERSON (Except Mt. Pleasant, Warren, Brush Creek, Saline & Salineville Townships & the Village of Dillonvale)

	Rates	Fringes
Bricklayer, Stonemason	$ 29.34	16.11

BROH0016-002 06/01/2019

ASHTABULA, GEAUGA, and LAKE COUNTIES

	Rates	Fringes
Bricklayer, Stonemason	$ 29.34	16.11

BROH0018-002 06/01/2019

BROWN, BUTLER, CLERMONT, HAMILTON, PREBLE (Gasper, Dixon,

Israel, Lanier, Somers & Gratis Townships) & WARREN COUNTIES:

	Rates	Fringes
Bricklayer, Stonemason.....	$ 29.34	16.11

BROH0022-004 06/01/2019

CHAMPAIGN, CLARK, CLINTON, DARKE, GREENE, HIGHLAND, LOGAN, MIAMI, MONTGOMERY, PREBLE (Jackson, Monroe, Harrison, Twin, Jefferson & Washington Townships) and SHELBY COUNTIES

	Rates	Fringes
Bricklayer, Stonemason.....	$ 29.34	16.11

BROH0032-001 06/01/2019

GALLIA & MEIGS

	Rates	Fringes
Bricklayer, Stonemason.....	$ 29.34	16.11

BROH0035-002 06/01/2019

ALLEN, AUGLAIZE, MERCER and VAN WERT COUNTIES

	Rates	Fringes
Bricklayer, Stonemason.....	$ 29.34	16.11

BROH0039-002 06/01/2019

ADAMS & SCIOTO

	Rates	Fringes
Bricklayer, Stonemason.....	$ 29.34	16.11

BROH0040-003 06/01/2019

ASHLAND, CRAWFORD, HARDIN, HOLMES, MARION, MORROW, RICHLAND, WAYNE and WYANDOT (Except Crawford, Ridge, Richland & Tymochtee

Townships) COUNTIES

	Rates	Fringes
Bricklayer, Stonemason.....	$ 29.34	16.11

FOOTNOTE: Layout Man and Sawman rate: $1.00 per hour above journeyman rate.
Free standing stack work ground level to top of stack; Sandblasting and laying of carbon masonry material in swing stage and/or scaffold; Ramming and spading of plastics and gunniting: $1.50 per hour above journeyman rate.
""Hot"" work: $2.50 above journeyman rate.

BROH0044-002 06/01/2019

	Rates	Fringes
Bricklayer, Stonemason COSHOCTON, FAIRFIELD, GUERNSEY, HOCKING, KNOX, KICKING, MORGAN, MUSKINGUM, NOBLE (Beaver, Buffalo, Seneca & Wayne Townships) & PERRY COUNTIES:.....	$ 29.34	16.11

BROH0045-002 06/01/2017

FAYETTE, JACKSON, PIKE, ROSS and VINTON COUNTIES

	Rates	Fringes
Bricklayer, Stonemason.....	$ 28.65	14.55

BROH0046-002 06/01/2019

ERIE, HANCOCK, HURON, OTTAWA, SANDUSKY, SENECA, WOOD (Perry & Bloom Townships) and WYANDOT (Tymochtee, Crawford, Ridge & Richland Townships) COUNTIES & the Islands of Lake Erie north of Sandusky

	Rates	Fringes

Bricklayer, Stonemason.....$ 29.34 16.11

FOOTNOTE: Layout Man and Sawman rate: $1.00 per hour above journeyman rate.
Free standing stack work ground level to top of stack; Sandblasting and laying of carbon masonry material in swing stage and/or scaffold; Ramming and spading of plastics and gunniting: $1.50 per hour above journeyman rate.
""Hot"" work: $2.50 above journeyman rate.

BROH0052-001 06/01/2019

ATHENS COUNTY

	Rates	Fringes
Bricklayer, Stonemason.....	$ 29.34	16.11

BROH0052-003 06/01/2019

NOBLE (Brookfield, Noble, Center, Sharon, Olive, Enoch, Stock, Jackson, Jefferson & Elk Townships) and WASHINGTON COUNTIES

	Rates	Fringes
Bricklayer, Stonemason.....	$ 29.34	16.11

BROH0055-003 06/01/2017

DELAWARE, FRANKLIN, MADISON, PICKAWAY and UNION COUNTIES

	Rates	Fringes
Bricklayer, Stonemason.....	$ 28.65	14.55

CARP0003-004 05/01/2017

MAHONING & TRUMBULL

	Rates	Fringes
CARPENTER.....	$ 26.20	17.42

CARP0069-003 05/01/2017

CARROLL, STARK, TUSCARAWAS & WAYNE

	Rates	Fringes
CARPENTER	$ 25.98	15.98

CARP0069-006 05/01/2017

COSHOCTON, HOLMES, KNOX & MORROW

	Rates	Fringes
CARPENTER	$ 24.04	15.29

CARP0171-002 05/01/2019

BELMONT, COLUMBIANA, HARRISON, JEFFERSON & MONROE

	Rates	Fringes
CARPENTER	$ 27.37	20.02

CARP0200-002 05/01/2017

ADAMS, ATHENS, DELAWARE, FAIRFIELD, FAYETTE, FRANKLIN, GALLIA, GUERNSEY, HIGHLAND, HOCKING, JACKSON, LAWRENCE, LICKING, MADISON, MARION, MEIGS, MORGAN, MUSKINGUM, NOBLE, PERRY, PICKAWAY, PIKE, ROSS, SCIOTO, UNION, VINTON and WASHINGTON COUNTIES

	Rates	Fringes
CARPENTER	$ 29.07	16.22
Diver	$ 39.41	10.40
PILEDRIVERMAN	$ 29.07	16.22

CARP0248-005 07/01/2008

LUCAS & WOOD

	Rates	Fringes
CARPENTER	$ 27.27	14.58

CARP0248-008 07/01/2008

	Rates	Fringes
CARPENTER DEFIANCE, FULTON, HANCOCK, HENRY, PAULDING & WILLIAMS COUNTIES	$ 23.71	13.28

CARP0254-002 05/01/2017

ASHTABULA, CUYAHOGA, GEAUGA & LAKE

	Rates	Fringes
CARPENTER	$ 32.40	16.97

CARP0372-002 05/01/2016

ALLEN, AUGLAIZE, HARDIN, MERCER, PUTNAM & VAN WERT

	Rates	Fringes
CARPENTER	$ 24.54	18.21

CARP0639-003 05/01/2017

MEDINA, PORTAGE & SUMMIT

	Rates	Fringes
CARPENTER	$ 30.42	16.99

CARP0735-002 05/01/2019

ASHLAND, ERIE, HURON, LORAIN & RICHLAND

	Rates	Fringes
CARPENTER	$ 26.30	17.91

CARP1311-001 05/01/2017

BROWN, BUTLER, CHAMPAIGN, CLARK, CLERMONT, CLINTON, DARKE, GREENE, HAMILTON, LOGAN, MIAMI, MONTGOMERY, PREBLE, SHELBY &

WARREN

	Rates	Fringes
Carpenter & Piledrivermen	$ 29.34	15.95
Diver	$ 40.58	9.69

CARP1393-002 07/01/2008

CRAWFORD, DEFIANCE, FULTON, HANCOCK, HENRY, LUCAS, OTTAWA, PAULDING, SANDUSKY, SENECA, WILLIAMS & WOOD

	Rates	Fringes
Piledrivermen & Diver's Tender	$ 27.30	16.05

DIVERS - $250.00 per day

CARP1393-003 07/01/2008

ALLEN, AUGLAIZE, HARDIN, MERCER, PUTNAM, VAN WERT & WYANDOT

	Rates	Fringes
Piledrivermen & Diver's Tender	$ 25.15	15.92

DIVERS - $250.00 per day

CARP1871-006 05/01/2017

BELMONT, HARRISON, & MONROE

	Rates	Fringes
Diver, Wet	$ 48.11	17.33
Piledrivermen; Diver, Dry	$ 32.07	17.33

CARP1871-008 05/01/2017

ASHLAND, ASHTABULA, CUYAHOGA, ERIE, GEAUGA, HURON, LAKE, LORAIN, MEDINA, PORTAGE, RICHLAND & SUMMIT

	Rates	Fringes

Diver, Wet.....$ 45.80 18.84
Piledrivermen; Diver, Dry.....$ 30.53 18.84

CARP1871-014 05/01/2017

CARROLL, STARK, TUSCARAWAS & WAYNE

Rates Fringes

Diver, Wet.....$ 38.34 16.95
Piledrivermen; Diver, Dry.....$ 25.56 16.95

CARP1871-015 05/01/2017

COSHOCTON, HOLMES, KNOX & MORROW

Rates Fringes

Diver, Wet.....$ 37.34 16.07
Piledrivermen; Diver, Dry.....$ 24.89 16.07

CARP1871-017 05/01/2017

MAHONING & TRUMBULL

Rates Fringes

Diver, Wet.....$ 40.65 17.62
Piledrivermen; Diver, Dry.....$ 27.10 17.62

CARP2235-012 01/01/2014

COLUMBIANA & JEFFERSON

Rates Fringes

PILEDRIVERMAN.....$ 31.74 16.41

CARP2239-001 07/01/2008

CRAWFORD, OTTAWA, SANDUSKY, SENECA & WYANDOT

Rates Fringes

CARPENTER.....$ 23.71 13.28

ELEC0008-002 05/25/2020

DEFIANCE, FULTON, HANCOCK, HENRY, LUCAS, OTTAWA, PAULDING, PUTNAM, SANDUSKY, SENECA, WILLIAMS & WOOD

	Rates	Fringes
CABLE SPLICER	$ 38.98	18.96
ELECTRICIAN	$ 41.81	4.5%+20.73

ELEC0032-003 11/29/2020

ALLEN, AUGLAIZE, HARDIN, LOGAN, MERCER, SHELBY, VAN WERT & WYANDOT (Crawford, Jackson, Marseilles, Mifflin, Ridgeland, Ridge & Salem Townships)

	Rates	Fringes
ELECTRICIAN	$ 32.12	20.29

ELEC0038-002 04/27/2020

CUYAHOGA, GEAUGA (Bainbridge, Chester & Russell Townships) & LORAIN (Columbia Township)

	Rates	Fringes
ELECTRICIAN		
Excluding Sound & Communications Work	$ 39.88	21.22

FOOTNOTES;
a. 6 Paid Holidays: New Year's Day; Memorial Day; July 4th; Labor Day; Thanksgiving Day; & Christmas Day
b. 1 week's paid vacation for 1 year's service; 2 weeks' paid vacation for 2 or more years' service

---

ELEC0038-008 04/29/2019

CUYAHOGA, GEAUGA (Bainbridge, Chester & Russell Townships) & LORAIN (Columbia Township)

	Rates	Fringes
Sound & Communication Technician		
Communications Technician	$ 27.55	11.98
Installer Technician	$ 26.30	11.94

FOOTNOTES;
a. 6 Paid Holidays: New Year's Day; Memorial Day; July 4th; Labor Day; Thanksgiving Day; & Christmas Day
b. 1 week's paid vacation for 1 year's service; 2 weeks' paid vacation for 2 or more years' service

---

ELEC0064-003 11/30/2020

COLUMBIANA (Butler, Fairfield, Perry, Salem & Unity Townships) MAHONING (Austintown, Beaver, Berlin, Boardman, Canfield, Ellsworth, Coitsville, Goshen, Green, Jackson, Poland, Springfield & Youngstown Townships), & TRUMBULL (Hubbard & Liberty Townships)

	Rates	Fringes
ELECTRICIAN	$ 35.67	16.37

ELEC0071-001 01/01/2019

ASHLAND, CHAMPAIGN, CLARK, COSHOCTON, CRAWFORD, DELAWARE, FAIRFIELD, FAYETTE, FRANKLIN, GUERNSEY, HIGHLAND, HOCKING, JACKSON (Coal, Jackson, Liberty, Milton, Washington & Wellston Townships), KNOX, LICKING, MADISON, MARION, MONROE, MORGAN, MORROW, MUSKINGUM, NOBLE, PERRY, PICKAWAY, PIKE (Beaver, Benton, Jackson, Mifflin, Pebble, Peepee, Perry & Seal Townships), RICHLAND, ROSS, TUSCARAWAS (Auburn, Bucks, Clay, Jefferson, Oxford, Perry, Salem, Rush, Washington & York Townships), UNION, VINTON (Clinton, Eagle, Elk, Harrison, Jackson, Richland & Swan Townships), and WASHINGTON COUNTIES

	Rates	Fringes
Line Construction		

Equipment Operators.....	$ 33.62	13.40
Groundmen.....	$ 24.17	11.32
Linemen & Cable Splicers....	$ 38.27	14.42

ELEC0071-004 01/01/2019

AUGLAIZE, CLINTON, DARKE, GREENE, LOGAN, MERCER, MIAMI, MONTGOMERY, PREBLE, and SHELBY COUNTIES

	Rates	Fringes
Line Construction		
Equipment Operator.....	$ 33.62	13.40
Groundman.....	$ 24.17	11.32
Lineman & Cable Splicers....	$ 38.27	14.42

ELEC0071-005 12/31/2018

ASHTABULA, CUYAHOGA, GEAUGA, LAKE & LORAIN

	Rates	Fringes
LINE CONSTRUCTION: Equipment Operator		
DOT/Traffic Signal & Highway Lighting Projects...	$ 32.44	14.10
Municipal Power/Transit Projects.....	$ 40.10	16.42
LINE CONSTRUCTION: Groundman		
DOT/Traffic Signal & Highway Lighting Projects...	$ 25.06	12.26
Municipal Power/Transit Projects.....	$ 31.19	14.11
LINE CONSTRUCTION: Linemen/Cable Splicer		
DOT/Traffic Signal & Highway Lighting Projects...	$ 36.13	15.03
Municipal Power/Transit Projects.....	$ 44.56	17.58

ELEC0071-008 01/01/2019

COLUMBIANA, MAHONING, and TRUMBULL COUNTIES

	Rates	Fringes

Line Construction		
Equipment Operator.....	$ 33.62	13.40
Groundman.....	$ 24.17	11.32
Lineman & Cable Splicers....	$ 38.27	14.42

ELEC0071-010 01/01/2019

BELMONT, CARROLL, HARRISON, HOLMES, JEFFERSON, MEDINA, PORTAGE, STARK, SUMMIT, and WAYNE COUNTIES

	Rates	Fringes
Line Construction		
Equipment Operator.....	$ 33.62	13.40
Groundman.....	$ 24.17	11.32
Lineman & Cable Splicers....	$ 38.27	14.42

ELEC0071-013 01/01/2019

BROWN, BUTLER, CLERMONT, HAMILTON, and WARREN COUNTIES

	Rates	Fringes
Line Construction		
Equipment Operator.....	$ 33.62	13.40
Groundman.....	$ 24.17	11.32
Lineman & Cable Splicers....	$ 38.27	14.42

ELEC0071-014 01/01/2019

ADAMS, ATHENS, GALLIA, JACKSON (Bloomfield, Franklin, Hamilton, Lick, Jefferson, Scioto & Madison Townships), LAWRENCE, MEIGS, PIKE (Camp Creek, Marion, Newton, Scioto, Sunfish & Union Townships), SCIOTO & VINTON (Brown, Knox, Madison, Vinton & Wilkesville Townships)

	Rates	Fringes
Line Construction		
Equipment Operator.....	$ 33.62	13.40
Groundman.....	$ 24.17	11.32
Lineman & Cable Splicers....	$ 38.27	14.42

ELEC0082-002 11/30/2020

CLINTON, DARKE, GREENE, MIAMI, MONTGOMERY, PREBLE & WARREN
(Wayne, Clear Creek & Franklin Townships)

	Rates	Fringes
ELECTRICIAN	$ 32.15	20.51

ELEC0082-006 11/26/2018

CLINTON, DARKE, GREENE, MIAMI, MONTGOMERY, PREBLE & WARREN
(Wayne, Clear Creek & Franklin Townships)

	Rates	Fringes
Sound & Communication Technician		
Cable Puller	$ 12.18	3.85
Installer/Technician	$ 24.35	11.29

ELEC0129-003 02/24/2020

LORAIN (Except Columbia Township) & MEDINA (Litchfield &
Liverpool Townships)

	Rates	Fringes
ELECTRICIAN	$ 35.35	17.68

ELEC0129-004 02/24/2020

ERIE & HURON (Lyme, Ridgefield, Norwalk, Townsend, Wakeman,
Sherman, Peru, Bronson, Hartland, Clarksfield, Norwich,
Greenfield, Fairfield, Fitchville & New London Townships)

	Rates	Fringes
ELECTRICIAN	$ 35.35	17.68

ELEC0141-003 09/01/2019

BELMONT COUNTY

	Rates	Fringes
CABLE SPLICER	$ 30.63	25.87
ELECTRICIAN	$ 30.38	25.87

ELEC0212-003 11/26/2018

BROWN, CLERMONT & HAMILTON

	Rates	Fringes
Sound & Communication Technician	$ 24.35	10.99

ELEC0212-005 06/03/2020

BROWN, CLERMONT, and HAMILTON COUNTIES

	Rates	Fringes
ELECTRICIAN	$ 31.30	19.07

ELEC0245-001 01/01/2020

ALLEN, HARDIN, VAN WERT & WYANDOT (Crawford, Jackson, Marseilles, Mifflin, Richland, Ridge & Salem Townships)

	Rates	Fringes
Line Construction		
Equipment Operator	$ 32.37	25.9%+6.75
Groundman Truck Driver	$ 17.70	25.9%+6.75
Lineman	$ 40.46	25.9%+6.75

FOOTNOTE: a. Half day's Paid Holiday: The last 4 hours of the workday prior to Christmas or New Year's Day

---

ELEC0245-003 01/01/2020

DEFIANCE, FULTON, HANCOCK, HENRY, HURON, LUCAS, OTTAWA, PAULDING, PUTNAM, SANDUSKY, SENECA, WILLIAMS, and WOOD COUNTIES

	Rates	Fringes
Line Construction		
Cable Splicer	$ 46.53	25.9%+6.75
Groundman/Truck Driver	$ 17.70	25.9%+6.75
Heli-arc Welding	$ 40.76	25.9%+6.75
Lineman	$ 40.46	25.9%+6.75
Operator - Class 1	$ 32.37	25.9%+6.75
Operator - Class 2	$ 28.32	25.9%+6.75
Traffic Signal & Lighting Technician	$ 36.41	25.9%+6.75

FOOTNOTE: a. 6 Observed Holidays: New Year's Day; Memorial Day; Independence Day; Labor Day; Thanksgiving Day; & Christmas Day. Employees who work on a holiday shall be paid at a rate of double their applicable classified straight-time rates for the work performed on such holiday.

ELEC0245-004 01/01/2020

ERIE COUNTY

	Rates	Fringes
Line Construction		
Cable Splicer	$ 46.53	25.9%+6.75
Groundman/Truck Driver	$ 17.70	25.9%+6.75
Lineman	$ 40.46	25.9%+6.75
Operator - Class 1	$ 32.37	25.9%+6.75
Operator - Class 2	$ 28.32	25.9%+6.75

FOOTNOTE: a. 6 Observed Holidays: New Year's Day; Memorial Day; Independence Day; Labor Day; Thanksgiving Day; & Christmas Day. Employees who work on a holiday shall be paid at a rate of double their applicable classified straight-time rates for the work performed on such holiday.

ELEC0246-001 10/29/2018

	Rates	Fringes
ELECTRICIAN	$ 38.00	84%+a

FOOTNOTE: a. 1 1/2 Paid Holidays: The last scheduled workday prior to Christmas & 4 hours on Good Friday.

ELEC0306-005 05/28/2018

MEDINA (Brunswick, Chatham, Granger, Guilford, Harrisville, Hinckley, Homer, Lafayette, Medina, Montville, Sharon, Spencer, Wadsworth, Westfield & York Townships), PORTAGE (Atwater, Aurora, Brimfield, Deerfield, Franklin, Mantua, Randolph, Ravenna, Rootstown, Shalersville, Streetsboro & Suffield Townships), SUMMIT & WAYNE (Baughman, Canaan, Chester, Chippewa, Congress, Green, Milton, & Wayne Townships)

	Rates	Fringes
CABLE SPLICER	$ 36.87	16.56
ELECTRICIAN	$ 34.54	5%+18.06

ELEC0317-002 06/01/2020

GALLIA & LAWRENCE

	Rates	Fringes
CABLE SPLICER	$ 32.68	18.13
ELECTRICIAN	$ 35.10	26.22

ELEC0540-005 12/28/2020

CARROLL (Northern half, including Fox, Harrison, Rose & Washington Townhships), COLUMBIANA (Knox Township), HOLMES, MAHONING (Smith Township), STARK, TUSCARAWAS (North of Auburn, Clay, Rush & York Townships), and WAYNE (South of Baughman, Chester, Green & Wayne Townships) COUNTIES

	Rates	Fringes
ELECTRICIAN	$ 34.00	25.50

ELEC0573-003 06/01/2020

ASHTABULA (Colebrook, Wayne, Williamsfield, Orwell & Windsor Townships), GEAUGA (Auburn, Middlefield, Parkman & Troy

Townships), MAHONING (Milton Township), PORTAGE (Charlestown, Edinburg, Freedom, Hiram, Nelson, Palmyra, Paris & Windham Townships), and TRUMBULL (Except Liberty & Hubbard Townships)

	Rates	Fringes
ELECTRICIAN	$ 34.11	19.46

ELEC0575-001 11/30/2020

ADAMS, FAYETTE, HIGHLAND, HOCKING, JACKSON (Bloomfield, Franklin, Hamilton, Jefferson, Lick, Madison, Scioto, Coal, Jackson, Liberty, Milton & Washington Townships), PICKAWAY (Deer Creek, Perry, Pickaway, Salt Creek & Wayne Townships), PIKE (Beaver, Benton, Jackson, Mifflin, Pebble, PeePee, Perry, Seal, Camp Creek, Newton, Scioto, Sunfish, Union & Marion Townships), ROSS, SCIOTO & VINTON (Clinton, Eagle, Elk, Harrison, Jackson, Richland & Swan Townships)

	Rates	Fringes
ELECTRICIAN	$ 33.75	19.22

ELEC0648-001 09/02/2019

BUTLER and WARREN COUNTIES (Deerfield, Hamilton, Harlan, Massie, Salem, Turtle Creek, Union & Washington Townships)

	Rates	Fringes
CABLE SPLICER	$ 30.50	18.23
ELECTRICIAN	$ 30.00	19.85

ELEC0673-004 02/01/2020

ASHTABULA (Excluding Orwell, Colebrook, Williamsfield, Wayne & Windsor Townships), GEAUGA (Burton, Chardon, Claridon, Hambden, Huntsburg, Montville, Munson, Newbury & Thompson Townships) and LAKE COUNTIES

	Rates	Fringes

CABLE SPLICER	$ 33.81	21.47
ELECTRICIAN	$ 33.56	21.47

ELEC0683-002 06/01/2020

CHAMPAIGN, CLARK, DELAWARE, FAIRFIELD, FRANKLIN, MADISON, PICKAWAY (Circleville, Darby, Harrison, Jackson, Madison, Monroe, Muhlenberg, Scioto, Walnut & Washington Townships), and UNION COUNTIES

	Rates	Fringes
CABLE SPLICER	$ 35.50	21.06
ELECTRICIAN	$ 34.50	21.06

ELEC0688-003 06/01/2020

ASHLAND, CRAWFORD, HURON (Richmond, New Haven, Ripley & Greenwich Townships), KNOX (Liberty, Clinton, Union, Howard, Monroe, Middleberry, Morris, Wayne, Berlin, Pike, Brown & Jefferson Townships), MARION, MORROW, RICHLAND and WYANDOT (Sycamore, Crane, Eden, Pitt, Antrim & Tymochtee Townships) COUNTIES

	Rates	Fringes
ELECTRICIAN	$ 30.00	19.66

ELEC0972-002 06/01/2020

ATHENS, MEIGS, MONROE, MORGAN, NOBLE, VINTON (Brown, Knox, Madison, Vinton & Wilkesville Townships), and WASHINGTON COUNITES

	Rates	Fringes
CABLE SPLICER	$ 37.35	27.81
ELECTRICIAN	$ 33.95	27.71

ELEC1105-001 05/28/2018

COSHOCTON, GUERNSEY, KNOX (Jackson, Clay, Morgan, Miller, Milford, Hilliar, Butler, Harrison, Pleasant & College

Townships), LICKING, MUSKINGUM, PERRY, and TUSCARAWAS (Auburn, York, Clay, Jefferson, Rush, Oxford, Washington, Salem, Perry & Bucks Townships) COUNTIES

	Rates	Fringes
ELECTRICIAN	$ 30.95	17.96

ENGI0018-003 05/01/2019

ASHTABULA, CUYAHOGA, ERIE, GEAUGA, LAKE, LORAIN, MEDINA, PORTAGE, and SUMMIT COUNTIES

	Rates	Fringes
POWER EQUIPMENT OPERATOR		
GROUP 1	$ 38.63	15.20
GROUP 2	$ 38.53	15.20
GROUP 3	$ 37.49	15.20
GROUP 4	$ 36.27	15.20
GROUP 5	$ 30.98	15.20
GROUP 6	$ 38.88	15.20
GROUP 7	$ 39.13	15.20

OPERATING ENGINEER CLASSIFICATIONS

GROUP 1 - Air Compressor on Steel Erection; Barrier Moving Machine; Boiler Operator on Compressor or Generator when mounted on a Rig; Cableway; Combination Concrete Mixer & Tower; Concrete Plant (over 4 yd. Capacity); Concrete Pump; Crane (All Types, Including Boom Truck, Cherry Picker); Crane-Compact, Track or Rubber over 4,000 lbs. capacity; Cranes-Self Erecting, Stationary, Track or Truck (All Configurations); Derrick; Dragline; Dredge (Dipper, Clam or Suction); Elevating Grader or Euclid Loader; Floating Equipment (All Types); Gradall; Helicopter Crew (Operator-Hoist or Winch); Hoe (all types); Hoisting Engine on Shaft or Tunnel Work; Hydraulic Gantry (Lifting System); Industrial-Type Tractor; Jet Engine Dryer (D8 or D9) Diesel Tractor; Locomotive (Standard Gauge); Maintenance Operator Class A; Mixer, Paving (Single or Double Drum); Mucking Machine; Multiple Scraper; Piledriving Machine (All Types); Power Shovel; Prentice Loader; Quad 9 (Double Pusher); Rail Tamper (with auto lifting & aligning device); Refrigerating

Machine (Freezer Operation); Rotary Drill, on Caisson work; Rough Terrain Fork Lift with Winch/Hoist; Side-Boom; Slip-Form Paver; Tower Derrick; Tree Shredder; Trench Machine (Over 24"" wide); Truck Mounted Concrete Pump; Tug Boat; Tunnel Machine and/or Mining Machine; Wheel Excavator; and Asphalt Plant Engineer (Cleveland District Only).

GROUP 2 - Asphalt Paver; Automatic Subgrader Machine, Self-Propelled (CMI Type); Bobcat Type and/or Skid Steer Loader with Hoe Attachment Greater than 7,000 lbs.; Boring Machine More than 48""; Bulldozer; Endloader; Horizontal Directional Drill (Over 50,000 ft lbs thrust); Hydro Milling Machine; Kolman-type Loader (production type-Dirt); Lead Greaseman; Lighting & Traffic Signal Installation Equipment (includes all groups or classifications); Material Transfer Equipment (Shuttle Buggy) Asphalt; Pettibone-Rail Equipment; Power Grader; Power Scraper; Push Cat; Rotomill (all), Grinders & Planers of All types; Trench Machine (24"" wide & under); Vermeer type Concrete Saw; and Maintenance Operators (Portage and Summit Counties Only).

GROUP 3 - A-Frame; Air Compressor on Tunnel Work (low pressure); Asphalt Plant Engineer (Portage and Summit Counties Only); Bobcat-type and/or Skid Steer Loader with or without Attachments; Highway Drills (all types); Locomotive (narrow gauge); Material Hoist/Elevator; Mixer, Concrete (more than one bag capacity); Mixer, one bag capacity (Side Loader); Power Boiler (Over 15 lbs. Pressure) Pump Operator installing & operating Well Points; Pump (4"" & over discharge); Roller, Asphalt; Rotovator (lime soil stabilizer); Switch & Tie Tampers (without lifting & aligning device); Utility Operator (Small equipment); Welding Machines; and Railroad Tie Inserter/Remover; Articulating/straight bed end dumps if assigned (minus $4.00 per hour.

GROUP 4 - Backfiller; Ballast Re-locator; Bars, Joint & Mesh Installing Machine; Batch Plant; Boring Machine Operator (48"" or less); Bull Floats; Burlap & Curing Machine; Concrete Plant (capacity 4 yd. & under); Concrete Saw (Multiple); Conveyor (Highway); Crusher; Deckhand; Farm-type Tractor with attachments (highway); Finishing Machine; Fireperson, Floating Equipment (all types); Forklift; Form Trencher; Hydro Hammer expect masonary;

Hydro Seeder; Pavement Breaker; Plant Mixer; Post Driver; Post Hole Digger (Power Auger); Power Brush Burner; Power Form Handling Equipment; Road Widening Trencher; Roller (Brick, Grade & Macadam); Self-Propelled Power Spreader; Self-Propelled Power Subgrader; Steam Fireperson; Tractor (Pulling Sheepfoot, Roller or Grader); and Vibratory Compactor with Integral Power.

GROUP 5 - Compressor (Portable, Sewer, Heavy & Highway); Drum Fireperson (Asphalt Plant); Generator; Masonry Fork Lift; Inboard-Outboard Motor Boat Launch; Oil Heater (asphalt plant); Oiler/Helper; Power Driven Heater; Power Sweeper & Scrubber; Pump (under 4"" discharge); Signalperson; Tire Repairperson; VAC/ALLS; Cranes - Compact, track or rubber under 4,000 pound capacity; fueling and greasing; and Chainmen.

GROUP 6 - Master Mechanic & Boom from 150 to 180.

GROUP 7 - Boom from 180 and over.

ENGI0018-004 05/01/2019

ADAMS, ALLEN, ASHLAND, ATHENS, AUGLAIZE, BELMONT, BROWN, BUTLER, CARROLL, CHAMPAIGN, CLARK, CLERMONT, CLINTON, COSHOCTON, CRAWFORD, DARKE, DEFIANCE, DELAWARE, FAIRFIELD, FAYETTE, FRANKLIN, FULTON, GALLIA, GREENE, GUERNSEY, HAMILTON, HANCOCK, HARDIN, HARRISON, HENRY, HIGHLAND, HOCKING, HOLMES, HURON, JACKSON, JEFFERSON, KNOX, LAWRENCE, LICKING, LOGAN, LUCAS, MADISON, MARION, MEIGS, MERCER, MIAMI, MONROE, MONTGOMERY, MORGAN, MORROW, MUSKINGUM, NOBLE, OTTAWA, PAULDING, PERRY, PICKAWAY, PIKE, PREBLE, PUTNAM, RICHLAND, ROSS, SANDUSKY, SCIOTO, SENECA, SHELBY, STARK, TUSCARAWAS, UNION, VAN WERT, VINTON, WARREN, WASHINGTON, WAYNE, WILLIAMS, WOOD, and YANDOT COUNTIES

	Rates	Fringes
POWER EQUIPMENT OPERATOR		
GROUP 1	$ 37.14	15.20
GROUP 2	$ 37.02	15.20
GROUP 3	$ 35.98	15.20
GROUP 4	$ 34.80	15.20
GROUP 5	$ 29.34	15.20

GROUP 6.....	$ 37.39	15.20
GROUP 7.....	$ 37.64	15.20

OPERATING ENGINEER CLASSIFICATIONS

GROUP 1 - Air Compressor on Steel Erection; Barrier Moving Machine; Boiler Operator on Compressor or Generator when mounted on a Rig; Cableway; Combination Concrete Mixer & Tower; Concrete Plant (over 4 yd. Capacity); Concrete Pump; Crane (All Types, Including Boom Truck, Cherry Picker); Crane-Compact, Track or Rubber over 4,000 lbs. capacity; Cranes-Self Erecting, Stationary, Track or Truck (All Configurations); Derrick; Dragline; Dredge (Dipper, Clam or Suction); Elevating Grader or Euclid Loader; Floating Equipment (All Types); Gradall; Helicopter Crew (Operator-Hoist or Winch); Hoe (all types); Hoisting Engine on Shaft or Tunnel Work; Hydraulic Gantry (Lifting System); Industrial-Type Tractor; Jet Engine Dryer (D8 or D9) Diesel Tractor; Locomotive (Standard Gauge); Maintenance Operator Class A; Mixer, Paving (Single or Double Drum); Mucking Machine; Multiple Scraper; Piledriving Machine (All Types); Power Shovel; Prentice Loader; Quad 9 (Double Pusher); Rail Tamper (with auto lifting & aligning device); Refrigerating Machine (Freezer Operation); Rotary Drill, on Caisson work; Rough Terrain Fork Lift with Winch/Hoist; Side-Boom; Slip-Form Paver; Tower Derrick; Tree Shredder; Trench Machine (Over 24"" wide); Truck Mounted Concrete Pump; Tug Boat; Tunnel Machine and/or Mining Machine; and Wheel Excavator.

GROUP 2 - Asphalt Paver; Automatic Subgrader Machine, Self-Propelled (CMI Type); Bobcat Type and/or Skid Steer Loader with Hoe Attachment Greater than 7,000 lbs.; Boring Machine More than 48""; Bulldozer; Endloader; Hydro Milling Machine; Horizontal Directional Drill (over 50,000 ft. lbs. thrust);Kolman-type Loader (production type-Dirt); Lead Greaseman; Lighting & Traffic Signal Installation Equipment (includes all groups or classifications); Material Transfer Equipment (Shuttle Buggy) Asphalt; Pettibone-Rail Equipment; Power Grader; Power Scraper; Push Cat; Rotomill (all), Grinders & Planers of All types; Trench Machine (24"" wide & under); and Vermeer type Concrete Saw.

GROUP 3 - A-Frame; Air Compressor on Tunnel Work (low pressure); Asphalt Plant Engineer; Bobcat-type and/or Skid Steer Loader with or without Attachments; Highway Drills

(all types); Locomotive (narrow gauge); Material Hoist/Elevator; Mixer, Concrete (more than one bag capacity); Mixer, one bag capacity (Side Loader); Power Boiler (Over 15 lbs. Pressure) Pump Operator installing & operating Well Points; Pump (4"" & over discharge); Railroad Tie Inserter/Remover; Roller, Asphalt; Rotovator (lime soil stabilizer); Switch & Tie Tampers (without lifting & aligning device); Utility Operator (Small equipment); and Welding Machines; Artiaculating/straight bed end dumps if assigned (minus $4.00 per hour.

GROUP 4 - Backfiller; Ballast Re-locator; Bars, Joint & Mesh Installing Machine; Batch Plant; Boring Machine Operator (48"" or less); Bull Floats; Burlap & Curing Machine; Concrete Plant (capacity 4 yd. & under); Concrete Saw (Multiple); Conveyor (Highway); Crusher; Deckhand; Farm-type Tractor with attachments (highway); Finishing Machine; Fireperson, Floating Equipment (all types); Fork Lift; Form Trencher; Hydro Hammer expect masonary; Hydro Seeder; Pavement Breaker; Plant Mixer; Post Driver; Post Hole Digger (Power Auger); Power Brush Burner; Power Form Handling Equipment; Road Widening Trencher; Roller (Brick, Grade & Macadam); Self-Propelled Power Spreader; Self-Propelled Power Subgrader; Steam Fireperson; Tractor (Pulling Sheepfoot, Roller or Grader); and Vibratory Compactor with Integral Power.

GROUP 5 - Compressor (Portable, Sewer, Heavy & Highway); Drum Fireperson (Asphalt Plant); Generator; Masonary Forklift; Inboard-Outboard Motor Boat Launch; Oil Heater (asphalt plant); Oiler/Helper; Power Driven Heater; Power Sweeper & Scrubber; Pump (under 4"" discharge); Signalperson; Tire Repairperson; VAC/ALLS; Cranes - Compact, track or rubber under 4,000 pound capacity; fueling and greasing; and Chainmen.

GROUP 6 - Master Mechanic & Boom from 150 to 180.

GROUP 7 - Boom from 180 and over.

ENGI0066-023 06/01/2017

COLUMBIANA, MAHONING & TRUMBULL COUNTIES

	Rates	Fringes

POWER EQUIPMENT OPERATOR

ASBESTOS; HAZARDOUS/TOXIC WASTE PROJECTS		
GROUP 1 - A & B	$ 39.23	19.66
ASBESTOS; HAZARDOUS/TOXIC WASTE PROJECTS		
GROUP 2 - A & B	$ 38.90	19.66
ASBESTOS; HAZARDOUS/TOXIC WASTE PROJECTS		
GROUP 3 - A & B	$ 34.64	19.66
ASBESTOS; HAZARDOUS/TOXIC WASTE PROJECTS		
GROUP 4 - A & B	$ 30.70	19.66
ASBESTOS; HAZARDOUS/TOXIC WASTE PROJECTS		
GROUP 5 - A & B	$ 27.30	19.66
HAZARDOUS/TOXIC WASTE PROJECTS		
GROUP 1 - C & D	$ 35.96	19.66
HAZARDOUS/TOXIC WASTE PROJECTS		
GROUP 2 - C & D	$ 35.66	19.66
HAZARDOUS/TOXIC WASTE PROJECTS		
GROUP 3 - C & D	$ 31.76	19.66
HAZARDOUS/TOXIC WASTE PROJECTS		
GROUP 4 - C & D	$ 28.14	19.66
HAZARDOUS/TOXIC WASTE PROJECTS		
GROUP 5 - C & D	$ 25.03	19.66
ALL OTHER WORK		
GROUP 1	$ 32.69	19.66
ALL OTHER WORK		

GROUP 2.....$ 32.42		19.66
ALL OTHER WORK		
GROUP 3.....$ 28.87		19.66
ALL OTHER WORK		
GROUP 4.....$ 25.58		19.66
ALL OTHER WORK		
GROUP 5.....$ 22.75		19.66

GROUP 1 - Rig, Pile Driver or Caisson Type; & Rig, Pile Hydraulic Unit Attached

GROUP 2 - Asphalt Heater Planer; Backfiller with Drag Attachment; Backhoe; Backhoe with Shear attached; Backhoe-Rear Pivotal Swing; Batch Plant-Central Mix Concrete; Batch Plant, Portable concrete; Berm Builder-Automatic; Boat Derrick; Boat-Tug; Boring Machine Attached to Tractor; Bullclam; Bulldozer; C.M.I. Road Builder & Similar Type; Cable Placer & Layer; Carrier-Straddle; Carryall-Scraper or Scoop; Chicago Boom; Compactor with Blade Attached; Concrete Saw (Vermeer or similar type); Concrete Spreader Finisher; Combination, Bidwell Machine; Crane; Crane-Electric Overhead; Crane-Rough Terrain; Crane-Side Boom; Crane-Truck; Crane-Tower; Derrick-Boom; Derrick-Car; Digger-Wheel (Not trencher or road widener); Double Nine; Drag Line; Dredge; Drill-Kenny or Similar Type; Easy Pour Median Barrier Machine (or similar type); Electromatic; Frankie Pile; Gradall; Grader; Gurry; Self-Propelled; Heavy Equipment Robotics Operator/Mechanic; Hoist-Monorail; Hoist-Stationary & Mobile Tractor; Hoist, 2 or 3 drum; Horizontal Directional Drill Operator; Jackall; Jumbo Machine; Kocal & Kuhlman; Land-Seagoing Vehicle; Loader, Elevating; Loader, Front End; Loader, Skid Steer; Locomotive; Mechanic/Welder; Metro Chip Harvester with Boom; Mucking Machine; Paver-Asphalt Finishing Machine; Paver-Road Concrete; Paver-Slip Form (C.M.I. or similar); Place Crete Machine with Boom; Post Driver (Carrier mounted); Power Driven Hydraulic Pump & Jack (When used in Slip Form or Lift Slab Construction); Pump Crete Machine; Regulator-Ballast; Hydraulic Power Unit not attached to Rig for Pile Drillings; Rigs-Drilling; Roto Mill or similar Full Lane (8' Wide & Over); Roto Mill or similar type

(Under 8'); Shovel; Slip Form Curb Machine; Speedwing; Spikemaster; Stonecrusher; Tie Puller & Loader; Tie Tamper; Tractor-Double Boom; Tractor with Attachments; Truck-Boom; Truck-Tire; Trench Machine; Tunnel Machine (Mark 21 Java or similar); & Whirley (or similar type)

GROUP 3 - Asphalt Plant; Bending Machine (Pipeline or similar type); Boring machine, Motor Driven; Chip Harvester without Boom; Cleaning Machine, Pipeline Type; Coating Machine, Pipeline Type; Compactor; Concrete Belt Placer; Concrete Finisher; Concrete Planer or Asphalt; Concrete Spreader; Elevator; Fork Lift (Home building only); Fork lift & Lulls; Fork Lift Walk Behind (Hoisting over 1 buck high); Form Line Machine; Grease Truck operator; Grout Pump; Gunnite Machine; Horizontal Directional Drill Locator; Single Drum Hoist with or without Tower; Huck Bolting Machine; Hydraulic Scaffold (Hoisting building materials); Paving Breaker (Self-propelled or Ridden); Pipe Dream; Pot Fireperson (Power Agitated); Refrigeration Plant; Road Widener; Roller; Sasgen Derrick; Seeding Machine; Soil Stabilizer (Pump type); Spray Cure Machine, Self-Propelled; Straw Blower Machine; Sub-Grader; Tube Finisher or Broom C.M.I. or similar type; & Tugger Hoist

GROUP 4 - Air Curtain Destructor & Similar Type; Batch Plant-Job Related; Boiler Operator; Compressor; Conveyor; Curb Builder, self-propelled; Drill Wagon; Generator Set; Generator-Steam; Heater-Portable Power; Hydraulic Manipulator Crane; Jack-Hydraulic Power driven; Jack-Hydraulic (Railroad); Ladavator; Minor Machine Operator; Mixer-Concrete; Mulching Machine; Pin Puller; Power Broom; Pulverizer; Pump; Road Finishing Machine (Pull Type); Saw-Concrete-Self-Propelled (Highway Work); Signal Person; Spray Cure Machine-Motor Powered; Stump Cutter; Tractor; Trencher Form; Water Blaster; Steam Jenny; Syphon; Vibrator-Gasoline; & Welding Machine

GROUP 5 - Brakeperson; Fireperson; & Oiler

IRON0017-002 05/01/2020

ASHTABULA (North of Route 6, starting at the Geauga County Line, proceeding east to State Route 45), CUYAHOGA, ERIE (Eastern 2/3), GEAUGA, HURON (East of a line drawn from the north border through Monroeville & Willard), LAKE, LORAIN,

MEDINA (North of Old Rte. #224), PORTAGE (West of a line from Middlefield to Shalersville to Deerfield), and SUMMIT (North of Old Rte. #224, including city limits of Barberton) COUNTIES

	Rates	Fringes
IRONWORKER		
Ornamental, Reinforcing, & Structural	$ 35.93	23.11

IRON0017-010 05/01/2020

ASHTABULA (Eastern part from Lake Erie on the north to route #322 on the south to include Conneaut, Kingsville, Sheffield, Denmark, Dorset, Cherry Valley, Wayne, Monroe, Pierpont, Richmond, Andover & Williamsfield Townships)

	Rates	Fringes
IRONWORKER		
Structural, including metal building erection & Reinforcing	$ 35.93	23.11

IRON0044-001 06/01/2018

ADAMS (Western Part), BROWN, BUTLER (Southern Part), CLERMONT, CLINTON (South of a line drawn from Blanchester to Lynchburg), HAMILTON, HIGHLAND (Excluding eastern one-fifth & portion of county inside lines drawn from Marshall to Lynchburg from the northern county line through E. Monroe to Marshall) and WARREN (South of a line drawn from Blanchester through Morrow to the west county line) COUNTIES

	Rates	Fringes
IRONWORKER, REINFORCING		
Beyond 30-mile radius of Hamilton County Courthouse	$ 28.67	21.20
Up to & including 30-mile radius of Hamilton County Courthouse	$ 27.60	20.70

IRON0044-002 06/01/2020

CLINTON (South of a line drawn from Blanchester to Lynchburg), HAMILTON, HIGHLAND (Excluding eastern one-fifth & portion of county inside lines drawn from Marshall to Lynchburg from the northern county line through E. Monroe to Marshall) & WARREN (South of a line drawn from Blanchester through Morrow to the west county line)

	Rates	Fringes
IRONWORKER		
Fence Erector	$ 28.76	21.40
Ornamental; Structural	$ 30.27	21.40

IRON0055-003 07/01/2019

CRAWFORD (Area Between lines drawn from where Hwy #598 & #30 meet through N. Liberty to the northern border & from said Hwy junction point due west to the border), DEFIANCE (S. of a line drawn from where Rte. #66 meets the northern line through Independence to the eastern county border), ERIE (Western 1/3), FULTON, HANCOCK, HARDIN (North of a line drawn from Maysville to a point 4 miles south of the northern line on the eastern line), HENRY, HURON (West of a line drawn from the northern border through Monroeville & Willard), LUCAS, OTTAWA, PUTNAM (East of a line drawn from the northern border down through Miller City to where #696 meets the southern border), SANDUSKY, SENECA, WILLIAMS (East of a line drawn from Pioneer through Stryker to the southern border), WOOD & WYANDOT (North of Rte. #30)

	Rates	Fringes
IRONWORKER		
Fence Erector	$ 21.30	20.92
Flat Road Mesh	$ 29.77	21.30
Tunnels & Caissons Under Pressure	$ 29.77	21.30
All Other Work	$ 30.38	24.40

IRON0147-002 06/01/2020

ALLEN (Northern half), DEFIANCE (Northern part, excluding south

of a line drawn from where Rte. #66 meets the northern line through Independence to the eastern county border), MERCER (Northern half), PAULDING, PUTNAM (Western part, excluding east of a line drawn from the northern border down through Miller City to where #696 meets the southern border), VAN WERT, and WILLIAMS (Western part, excluding east of a line drawn from Pioneer through Stryker to the southern border) COUNTIES

	Rates	Fringes
IRONWORKER	$ 29.58	23.27

IRON0172-002 06/01/2020

CHAMPAIGN (Eastern one-third), CLARK (Eastern one-fourth), COSHOCTON (West of a line beginning at the northwestern county line going through Walhonding & Tunnel Hill to the southern county line), CRAWFORD (South of Rte. #30), DELAWARE, FAIRFIELD, FAYETTE, FRANKLIN, HARDIN (Excluding a line drawn from Roundhead to Maysville), HIGHLAND (Eastern one-fifth), HOCKING, JACKSON (Northern half), KNOX, LICKING, LOGAN (Eastern one-third), MADISON, MARION, MORROW, MUSKINGUM (West of a line starting at Adams Mill going to Adamsville & going from Adamsville through Blue Rock to the southern border), PERRY, PICKAWAY, PIKE (Northern half), ROSS, UNION, VINTON and WYANDOT (South of Rte. #30) COUNTIES

	Rates	Fringes
IRONWORKER	$ 30.75	20.80

IRON0207-004 06/01/2020

ASHTABULA (Southern part starting at the Geauga County line), COLUMBIANA (E. of a line from Damascus to Highlandtown), MAHONING (N. of Old Route #224), PORTAGE (E. of a line from Middlefield to Shalersville to Deerfield) & TRUMBULL

	Rates	Fringes
IRONWORKER		
Layout; Sheeter	$ 31.25	25.75
Ornamental; Reinforcing;		

Structural	$ 28.06	24.70
Ornamental; Reinforcing	$ 30.25	25.75

IRON0290-002 06/01/2020

ALLEN (Southern half), AUGLAIZE, BUTLER (North of a line drawn from east to the west county line going through Oxford, Darrtown & Woodsdale), CHAMPAIGN (Excluding east of a line drawn from Catawla to the point where #68 intersects the northern county line), CLARK (Western two-thirds), CLINTON (Excluding south of a line drawn from Blanchester to Lynchburg), DARKE, GREENE, HIGHLAND (Inside lines drawn from Marshall to Lynchburg & from the northern county line through East Monroe to Marshall), LOGAN (West of a line drawn from West Liberty to where the northern county line meets the western county line of Hardin), MERCER (Southern half), MIAMI, MONTGOMERY, PREBLE, SHELBY & WARREN (Excluding south of a line drawn from Blanchester through Morrow to the western county line) COUNTIES

	Rates	Fringes
IRONWORKER	$ 29.68	22.90

IRON0549-003 12/01/2020

BELMONT, GUERNSEY, HARRISON, JEFFERSON, MONROE & MUSKINGUM (Excluding portion west of a line starting at Adams Mill going to Adamsville and going from Adamsville through Blue Rock to the south border)

	Rates	Fringes
IRONWORKER	$ 34.03	23.22

IRON0550-004 05/01/2020

ASHLAND, CARROLL, COLUMBIANA (W. of a line from Damascus to Highlandtown), COSHOCTON (E. of a line beginning at NW Co. line going through Walhonding & Tunnel Hill to the South Co. line), HOLMES, HURON (S. of Old Rte. #224), MAHONING (S. of Old Rte. #224), MEDINA (S. of Old Rte. #224), PORTAGE (S. of Old Rte. #224), RICHLAND, STARK, SUMMIT (S. of Old Rte. #224, Excluding city limits of Barberton), TUSCARAWAS, & WAYNE

	Rates	Fringes
Ironworkers:Structural, Ornamental and Reinforcing	$ 29.27	20.87

IRON0769-004 06/01/2020

ADAMS (Eastern Half), GALLIA, JACKSON (Southern Half), LAWRENCE & SCIOTO

	Rates	Fringes
IRONWORKER	$ 32.75	26.34

IRON0787-003 12/01/2020

ATHENS, MEIGS, MORGAN, NOBLE, and WASHINGTON COUNTIES

	Rates	Fringes
IRONWORKER	$ 30.98	22.75

LABO0265-008 05/01/2020

	Rates	Fringes
LABORER		
ASHTABULA, ERIE, HURON, LORAIN, LUCAS, MAHONING, MEDINA, OTTAWA, PORTAGE, SANDUSKY, STARK, SUMMIT, TRUMBULL & WOOD COUNTIES		
GROUP 1	$ 33.05	11.25
GROUP 2	$ 33.22	11.25
GROUP 3	$ 33.55	11.25
GROUP 4	$ 34.00	11.25
CUYAHOGA AND GEAUGA COUNTIES ONLY: SEWAGE PLANTS, WASTE PLANTS, WATER TREATMENT FACILITIES, PUMPING STATIONS, & ETHANOL PLANTS CONSTRUCTION	$ 35.66	11.25

CUYAHOGA, GEAUGA & LAKE COUNTIES		
GROUP 1	$ 34.28	11.25
GROUP 2	$ 34.45	11.25
GROUP 3	$ 34.78	11.25
GROUP 4	$ 35.23	11.25
REMAINING COUNTIES OF OHIO		
GROUP 1	$ 32.62	11.25
GROUP 2	$ 32.79	11.25
GROUP 3	$ 33.12	11.25
GROUP 4	$ 33.57	11.25

LABORER CLASSIFICATIONS

GROUP 1 - Asphalt Laborer; Carpenter Tender; Concrete Curing Applicator; Dump Man (Batch Truck); Guardrail and Fence Installer; Joint Setter; Laborer (Construction); Landscape Laborer; Mesh Handlers & Placer; Right-of-way Laborer; Riprap Laborer & Grouter; Scaffold Erector; Seal Coating; Surface Treatment or Road Mix Laborer; Sign Installer; Slurry Seal; Utility Man; Bridge Man; Handyman; Waterproofing Laborer; Flagperson; Hazardous Waste (level D); Diver Tender; Zone Person & Traffic Control

GROUP 2 - Asphalt Raker; Concrete Puddler; Kettle Man Pipeline); Machine Driven Tools (Gas, Electric, Air); Mason Tender; Brick Paver; Mortar Mixer; Power Buggy or Power Wheelbarrow; Paint Striper; Sheeting & Shoring Man; Surface Grinder Man; Plastic Fusing Machine Operator; Pug Mill Operator; & Vacuum Devices (wet or dry); Rodding Machine Operator; Diver; Screwman or Paver; Screed Person; Water Blast, Hand Held Wand; Pumps 4"" & Under (Gas, Air or Electric) & Hazardous Waste (level C); Air Track and Wagon Drill; Bottom Person; Cofferdam (below 25 ft. deep); Concrete Saw Person; Cutting with Burning Torch; Form Setter; Hand Spiker (Railroad); Pipelayer; Tunnel Laborer (without air) & Caisson; Underground Person (working in Sewer and Waterline, Cleaning, Repairing & Reconditioning); Sandblaster Nozzle Person; & Hazardous Waste (level B)

GROUP 3 - Blaster; Mucker; Powder Person; Top Lander; Wrencher (Mechanical Joints & Utility Pipeline); Yarner; Hazardous Waste (level A); Concrete Specialist; Concrete Crew in Tunnels (With Air-pressurized - $1.00 premium); Curb Setter & Cutter; Grade Checker; Utility Pipeline Tapper; Waterline; and Caulker

GROUP 4 - Miner (With Air-pressurized - $1.00 premium); & Gunite Nozzle Person

TUNNEL LABORER WITH AIR-PRESSURIZED ADD $1.00 TO BASE RATE

SIGNAL PERSON WILL RECEIVE THE RATE EQUAL TO THE RATE PAID THE LABORER CLASSIFICATION FOR WHICH HE OR SHE IS SIGNALING.

PAIN0006-002 05/01/2018

ASHTABULA, CUYAHOGA, GEAUGA, LAKE, LORAIN, PORTAGE (N. of the East-West Turnpike) & SUMMIT (N. of the East-West Turnpike)

	Rates	Fringes
PAINTER		
COMMERCIAL NEW WORK; REMODELING; & RENOVATIONS		
GROUP 1	$ 27.90	16.16
GROUP 2	$ 28.30	16.16
GROUP 3	$ 28.60	16.16
GROUP 4	$ 34.16	16.16
COMMERCIAL REPAINT		
GROUP 1	$ 26.40	16.16
GROUP 2	$ 26.80	16.16
GROUP 3	$ 27.10	16.16

PAINTER CLASSIFICATIONS - COMMERCIAL NEW WORK; REMODELING; & RENOVATIONS

GROUP 1 - Brush; & Roller

GROUP 2 - Sandblasting & Buffing

GROUP 3 - Spray Painting; Closed Steel Above 55 feet; Bridges & Open Structural Steel; Tanks - Water Towers; Bridge Painters; Bridge Riggers; Containment Builders

GROUP 4 - Bridge Blaster

PAINTER CLASSIFICATIONS - COMMERCIAL REPAINT

GROUP 1 - Brush; & Roller

GROUP 2 - Sandblasting & Buffing

GROUP 3 - Spray Painting

PAIN0007-002 07/01/2019

FULTON, HENRY, LUCAS, OTTAWA (Excluding Allen, Bay, Bono, Catawba Island, Clay Center, Curtice, Danbury, Eagle Beach, Elliston, Elmore, Erie, Fishback, Gem Beach & Genova) & WOOD

	Rates	Fringes
PAINTER		
NEW COMMERCIAL WORK		
GROUP 1	$ 27.64	17.79
GROUP 2	$ 27.39	17.79
GROUP 3	$ 27.39	17.79
GROUP 4	$ 27.39	17.79
GROUP 5	$ 27.39	17.79
GROUP 6	$ 27.39	17.79
GROUP 7	$ 27.39	17.79
GROUP 8	$ 27.39	17.79
GROUP 9	$ 27.39	17.79

REPAINT IS 90% OF JR

PAINTER CLASSIFICATIONS

GROUP 1 - Brush; Spray & Sandblasting Pot Tender

GROUP 2 - Refineries & Refinery Tanks; Surfaces 30 ft. or over where material is applied to or labor performed on above ground level (exterior), floor level (interior)

GROUP 3 - Swing Stage & Chair

GROUP 4 - Lead Abatement

GROUP 5 - All Methods of Spray

GROUP 6 - Solvent-Based Catalized Epoxy Materials of 2 or More Component Materials, to include Solvent-Based Conversion Varnish (excluding water based)

GROUP 7 - Spray Solvent Based Material; Sand & Abrasive Blasting

GROUP 8 - Towers; Tanks; Bridges; Stacks Over 30 Feet

GROUP 9 - Epoxy Spray (excluding water based)

PAIN0012-008 05/01/2019

BUTLER COUNTY

	Rates	Fringes
PAINTER		
GROUP 1	$ 21.95	10.20
GROUP 2	$ 25.30	10.20
GROUP 3	$ 25.80	10.20
GROUP 4	$ 26.05	10.20
GROUP 5	$ 26.30	10.20

PAINTER CLASSIFICATIONS

GROUP 1: Bridge Equipment Tender; Bridge/Containment Builder

GROUP 2: Brush & Roller

GROUP 3: Spray

GROUP 4: Sandblasting; & Waterblasting

GROUP 5: Elevated Tanks; Steeplejack Work; Bridge; & Lead Abatement

---

PAIN0012-010 05/01/2019

BROWN, CLERMONT, CLINTON, HAMILTON & WARREN

	Rates	Fringes
PAINTER		
HEAVY & HIGHWAY BRIDGES-		

GUARDRAILS-LIGHTPOLES-

STRIPING
Bridge Equipment Tender
and Containment Builder....$ 21.95 10.20
Bridges when highest
point of clearance is 60
feet or more; & Lead
Abatement Projects.....$ 26.30 10.20
Brush & Roller.....$ 25.30 10.20
Sandblasting & Hopper
Tender; Water Blasting.....$ 26.05 10.20
Spray.....$ 25.80 10.20

PAIN0093-001 12/01/2018

ATHENS, GUERNSEY, HOCKING, MONROE, MORGAN, NOBLE and WASHINGTON COUNTIES

	Rates	Fringes
PAINTER		
Bridges; Locks; Dams; Tension Towers; & Energized Substations	$ 34.04	18.50
Power Generating Facilities	$ 30.89	18.50

PAIN0249-002 06/01/2020

CLARK, DARKE, GREENE, MIAMI, MONTGOMERY & PREBLE

	Rates	Fringes
PAINTER		
GROUP 1 - Brush & Roller	$ 24.17	11.22
GROUP 2 - Swing, Scaffold Bridges; Structural Steel; Open Acid Tank; High Tension Electrical Equipment; & Hot Pipes	$ 24.17	11.22
GROUP 3 - Spray; Sandblast; Steamclean; Lead Abatement	$ 24.92	11.22
GROUP 4 - Steeplejack Work	$ 25.12	11.22
GROUP 5 - Coal Tar	$ 25.67	11.22

GROUP 6 - Bridge Equipment Tender & or Containment Builder	$ 32.88	11.22
GROUP 7 - Tanks, Stacks & Towers	$ 27.81	11.22
GROUP 8 - Bridge Blaster, Rigger	$ 35.88	11.22

PAIN0356-002 09/01/2009

KNOX, LICKING, MUSKINGUM, and PERRY

	Rates	Fringes
PAINTER		
Bridge Equipment Tenders and Containment Builders	$ 27.93	7.25
Bridges; Blasters; andRiggers	$ 34.60	7.25
Brush and Roller	$ 20.93	7.25
Sandblasting; Steam Cleaning; Waterblasting; and Hazardous Work	$ 25.82	7.25
Spray	$ 21.40	7.25
Structural Steel and Swing Stage	$ 25.42	7.25
Tanks; Stacks; and Towers	$ 28.63	7.25

PAIN0438-002 12/01/2018

BELMONT, HARRISON and JEFFERSON COUNTIES

	Rates	Fringes
PAINTER		
Bridges, Locks, Dams, Tension Towers & Energized Substations	$ 32.80	17.68
Power Generating Facilities	$ 29.65	17.68

PAIN0476-001 06/01/2020

COLUMBIANA, MAHONING, and TRUMBULL COUNITES

	Rates	Fringes

PAINTER

GROUP 1	$ 26.47	14.53
GROUP 2	$ 33.10	14.53
GROUP 3	$ 26.68	14.53
GROUP 4	$ 27.12	14.53
GROUP 5	$ 27.12	14.53
GROUP 6	$ 27.37	14.53
GROUP 7	$ 28.47	14.53

PAINTER CLASSIFICATIONS:

GROUP 1: Painters, Brush & Roller

GROUP 2: Bridges

GROUP 3: Structural Steel

GROUP 4: Spray, Except Bar Joist/Deck

GROUP 5: Epoxy/Mastic; Spray- Bar Joist/Deck; Working Above 50 Feet; and Swingstages

GROUP 6: Tanks; Sandblasting

GROUP 7: Towers; Stacks

PAIN0555-002 09/01/2020

ADAMS, HIGHLAND, JACKSON, PIKE & SCIOTO

	Rates	Fringes
PAINTER		
GROUP 1	$ 31.48	16.46
GROUP 2	$ 32.97	16.46
GROUP 3	$ 34.46	16.46
GROUP 4	$ 37.38	16.46

PAINTER CLASSIFICATIONS

GROUP 1 - Containment Builder

GROUP 2 - Brush; Roller; Power Tools, Under 40 feet

GROUP 3 - Sand Blasting; Spray; Steam Cleaning; Pressure

Washing; Epoxy & Two Component Materials; Lead Abatement; Hazardous Waste; Toxic Materials; Bulk & Storage Tanks of 25,000 Gallon Capacity or More; Elevated Tanks

GROUP 4 - Stacks; Bridges

PAIN0639-001 05/01/2011

	Rates	Fringes
Sign Painter & Erector	$ 20.61	3.50+a+b+c

FOOTNOTES: a. 7 Paid Holidays: New Year's Day; Memorial Day; July 4th; Labor Day; Thanksgiving Day; Christmas Day & 1 Floating Day
b. Vacation Pay: After 1 year's service - 5 days' paid vacation; After 2, but less than 10 years' service - 10 days' paid vacation; After 10, but less than 20 years' service - 15 days' paid vacation; After 20 years' service - 20 days' paid vacation
c. Funeral leave up to 3 days maximum paid leave for death of mother, father, brother, sister, spouse, child, mother-in-law, father-in-law, grandparent and inlaw provided employee attends funeral

---

PAIN0788-002 06/01/2020

ASHLAND, CRAWFORD, ERIE, HANCOCK, HURON, MARION, MORROW, OTTAWA (Allen, Bay, Bono, Catawba Island, Clay Center, Curtice, Danbury, Eagle Beach, Elliston, Elmore, Erie, Fishback, Gem Beach & Genoa), RICHLAND, SANDUSKY, SENECA & WYANDOT

	Rates	Fringes
PAINTER		
Brush & Roller	$ 24.66	14.05
Structural Steel	$ 26.26	14.05

WINTER REPAINT: Between December 1 to March 31 - 90%JR

$.50 PER HOUR SHALL BE ADDED TO THE RATE OF PAY FOR THE CLASSIFICATION OF WORK:

While working swingstage, boatswain chair, needle beam and horizontal cable. While operating sprayguns, sandblasting, cobblasting and high pressure waterblasting (4000psi).

$1.00 PER HOUR SHALL BE ADDED TO THE RATE OF PAY FOR THE CLASSIFICATION OF WORK:

For the application of catalized epoxy, including latex epoxy that is deemed hazardous, lead abatement, or for work or material where special precautions beyond normal work duties must be taken. For working on stacks, tanks, and towers over 40 feet in height.

PAIN0813-005 12/01/2008

GALLIA, LAWRENCE, MEIGS & VINTON

	Rates	Fringes
PAINTER		
Base Rate	$ 24.83	10.00
Bridges, Locks, Dams & Tension Towers	$ 27.83	10.00

PAIN0841-001 06/01/2018

MEDINA, PORTAGE (South of and including Ohio Turnpike), and SUMMIT (South of and including Ohio Turnpike) COUNTIES

	Rates	Fringes
Painters:		
GROUP 1	$ 25.75	14.35
GROUP 2	$ 26.40	14.35
GROUP 3	$ 26.50	14.35
GROUP 4	$ 26.60	14.35
GROUP 5	$ 27.00	14.35
GROUP 6	$ 39.20	11.75
GROUP 7	$ 27.00	14.35

PAINTER CLASSIFICATIONS:

GROUP 1 - Brush, Roller & Paperhanger

GROUP 2 - Epoxy Application

GROUP 3 - Swing Scaffold, Bosum Chair, & Window Jack

GROUP 4 - Spray Gun Operator of Any & All Coatings

GROUP 5 - Sandblast, Painting of Standpipes, etc. from Scaffolds, Bridge Work and/or Open Structural Steel, Standpipes and/or Water Towers

GROUP 6 - Public & Commerce Transportation, Steel or Galvanized, Bridges, Tunnels & Related Support Items (concrete)

GROUP 7 - Synthetic Exterior, Drywall Finisher and/or Taper, Drywall Finisher and Follow-up Man Using Automatic Tools

---

PAIN0841-002 06/01/2018

CARROLL, COSHOCTON, HOLMES, STARK, TUSCARAWAS & WAYNE

	Rates	Fringes
PAINTER		
Bridges; Towers, Poles & Stacks; Sandblasting Steel; Structural Steel & Metalizing	$ 22.78	13.63
Brush & Roller	$ 21.77	13.63
Spray; Tank Interior & Exterior	$ 22.60	13.63

PAIN1020-002 07/01/2020

ALLEN, AUGLAIZE, CHAMPAIGN, DEFIANCE, HARDIN, LOGAN, MERCER, PAULDING, PUTNAM, SHELBY, VAN WERT, and WILLIAMS COUNTIES

	Rates	Fringes
PAINTER		
Brush & Roller	$ 25.22	14.11
Drywall Finishing & Taping	$ 23.92	14.11
Lead Abatement	$ 26.97	14.11
Spray, Sandblasting		

Pressure Cleaning, & Refinery	$ 25.87	14.11
Swing Stage, Chair, Spiders, & Cherry Pickers	$ 25.47	14.11
Wallcoverings	$ 22.82	14.11

All surfaces 40 ft. or over where material is applied to or labor performed on, above ground level (exterior), floor level (interior) - $.50 premium

Applying Coal Tar Products - $1.00 premium

PAIN1275-002 06/01/2020

DELAWARE, FAIRFIELD, FAYETTE, FRANKLIN, MADISON, PICKAWAY, ROSS & UNION

	Rates	Fringes
PAINTER		
Bridges	$ 34.64	14.40
Brush; Roller	$ 25.16	14.40
Sandblasting; Steamcleaning; Waterblasting (3500 PSI or Over)& Hazardous Work	$ 25.86	14.40
Spray	$ 25.66	14.40
Stacks; Tanks; & Towers	$ 28.67	14.40
Structural Steel & Swing Stage	$ 25.46	14.40

PLAS0109-001 05/01/2018

MEDINA, PORTAGE, STARK, and SUMMIT COUNTIES

	Rates	Fringes
PLASTERER	$ 28.86	17.11

PLAS0109-003 05/01/2018

CARROLL, HOLMES, TUSCARAWAS, and WAYNE COUNTIES

	Rates	Fringes

PLASTERER.....$ 28.21 17.11

PLAS0132-002 05/01/2018

BROWN, BUTLER, CLERMONT, HAMILTON, HIGHLAND, WARREN COUNTIES

	Rates	Fringes
PLASTERER	$ 28.86	17.11

PLAS0404-002 05/01/2018

ASHTABULA, CUYAHOGA, GEAUGA, AND LAKE COUNTIES

	Rates	Fringes
PLASTERER	$ 29.63	17.11

PLAS0404-003 05/01/2018

LORAIN COUNTY

	Rates	Fringes
PLASTERER	$ 28.86	17.11

PLAS0526-022 05/01/2018

COLUMBIANA, MAHONING, and TRUMBULL COUNTIES

	Rates	Fringes
PLASTERER	$ 28.86	17.11

PLAS0526-023 05/01/2018

BELMONT, HARRISON, and JEFFERSON COUNTIES

	Rates	Fringes
PLASTERER	$ 28.21	17.11

PLAS0886-001 05/01/2018

FULTON, HANCOCK, HENRY, LUCAS, PUTNAM, and WOOD COUNTIES

	Rates	Fringes
PLASTERER	$ 29.63	17.11

PLAS0886-003 05/01/2018

DEFIANCE, ERIE, HURON, OTTAWA, PAULDING, SANDUSKY, and SENECA COUNTIES

	Rates	Fringes
PLASTERER	$ 28.86	17.11

PLAS0886-004 05/01/2018

ALLEN, AUGLAIZE, HARDIN, LOGAN, MERCER, and VAN WERT COUNTIES

	Rates	Fringes
PLASTERER	$ 28.21	17.11

PLUM0042-002 07/01/2018

ASHLAND, CRAWFORD, ERIE, HURON, KNOX, LORAIN, MORROW, RICHLAND & WYANDOT

	Rates	Fringes
Plumber, Pipefitter, Steamfitter	$ 34.20	22.07

PLUM0050-002 07/06/2020

DEFIANCE, FULTON, HANCOCK, HENRY, LUCAS, OTTAWA, PAULDING, PUTNAM, SANDUSKY, SENECA, WILLIAMS & WOOD

	Rates	Fringes
Plumber, Pipefitter, Steamfitter	$ 43.60	26.73

PLUM0055-003 05/04/2020

ASHTABULA, CUYAHOGA, GEAUGA, LAKE, MEDINA (N. of Rte. #18 & Smith Road) & SUMMIT (N. of Rte. #303, including the corporate limits of the city of Hudson)

	Rates	Fringes
PLUMBER	$ 37.07	27.71

PLUM0083-001 07/01/2017

BELMONT & MONROE (North of Rte. #78)

	Rates	Fringes
Plumber and Steamfitter	$ 32.16	31.51

PLUM0094-002 05/01/2020

CARROLL (Northen Half), STARK, and WAYNE COUNTIES

	Rates	Fringes
PLUMBER/PIPEFITTER	$ 35.78	21.44

PLUM0120-002 05/04/2020

ASHTABULA, CUYAHOGA, GEAUGA, LAKE, LORAIN (the C.E.I. Power House in Avon Lake), MEDINA (N. of Rte. #18) & SUMMIT (N. of #303)

	Rates	Fringes
PIPEFITTER	$ 40.22	25.48

PLUM0162-002 06/01/2020

CHAMPAIGN, CLARK, CLINTON, DARKE, FAYETTE, GREENE, MIAMI, MONTGOMERY & PREBLE

	Rates	Fringes
Plumber, Pipefitter,		

Steamfitter	$ 32.25	26.47

PLUM0168-002 06/01/2019

MEIGS, MONROE (South of Rte. #78), MORGAN (South of Rte. #78) & WASHINGTON

	Rates	Fringes
PLUMBER/PIPEFITTER	$ 35.32	31.63

PLUM0189-002 06/01/2019

DELAWARE, FAIRFIELD, FRANKLIN, HOCKING, LICKING, MADISON, MARION, PERRY, PICKAWAY, ROSS & UNION

	Rates	Fringes
Plumber, Pipefitter, Steamfitter	$ 38.45	16.98

---

* PLUM0219-002 06/01/2020

MEDINA (Rte. #18 from eastern edge of Medina Co., west to eastern corporate limits of the city of Medina, & on the county road from the west corporate limits of Medina running due west to and through community of Risley to the western edge of Medina County - All territory south of this line), PORTAGE, and SUMMIT (S. of Rte. #303) COUNTIES

	Rates	Fringes
Plumber and Steamfitter	$ 39.32	25.54

PLUM0392-002 06/01/2020

BROWN, BUTLER, CLERMONT, HAMILTON & WARREN

	Rates	Fringes
PLUMBER/PIPEFITTER	$ 33.91	22.29

PLUM0396-001 08/01/2020

COLUMBIANA (Excluding Washington & Yellow Creek Townships & Liverpool Twp. - Secs. 35 & 36 - West of County Road #427), MAHONING and TRUMBULL COUNTIES

	Rates	Fringes
PLUMBER/PIPEFITTER	$ 34.30	26.56

PLUM0495-002 06/01/2018

CARROLL (Rose, Monroe, Union, Lee, Orange, Perry & Loudon Townships), COLUMBIANA (Washington & Yellow Creek Townships & Liverpool Township, Secs. 35 & 36, West of County Rd. #427), COSHOCTON, GUERNSEY, HARRISON, HOLMES, JEFFERSON, MORGAN (South to State Rte. #78 & from McConnelsville west on State Rte. #37 to the Perry County line), MUSKINGUM, NOBLE, and TUSCARAWAS COUNTIES

	Rates	Fringes
Plumber, Pipefitter, Steamfitter	$ 38.24	23.09

PLUM0577-002 06/01/2019

ADAMS, ATHENS, GALLIA, HIGHLAND, JACKSON, LAWRENCE, PIKE, SCIOTO & VINTON

	Rates	Fringes
Plumber, Pipefitter, Steamfitter	$ 34.90	24.11

PLUM0776-002 07/01/2020

ALLEN, AUGLAIZE, HARDIN, LOGAN, MERCER, SHELBY and VAN WERT COUNTIES

	Rates	Fringes
Plumber, Pipefitter,		

Steamfitter.....$ 37.63 25.58

TEAM0377-003 05/01/2020

STATEWIDE, EXCEPT CUYAHOGA, GEAUGA & LAKE

	Rates	Fringes
TRUCK DRIVER		
GROUP 1	$ 28.89	15.40
GROUP 2	$ 29.31	15.40

TRUCK DRIVER CLASSIFICATIONS

GROUP 1 - Asphalt Distributor; Batch; 4- Wheel Service; 4-Wheel Dump; Oil Distributor & Tandem

GROUP 2 - Tractor-Trailer Combination: Fuel; Pole Trailer; Ready Mix; Semi-Tractor; & Asphalt Oil Spraybar Man When Operated From Cab; 5 Axles & Over; Belly Dump; End Dump; Articulated Dump; Heavy Duty Equipment; Low Boy; & Truck Mechanic

---

TEAM0436-002 05/01/2020

CUYAHOGA, GEAUGA & LAKE

	Rates	Fringes
TRUCK DRIVER		
GROUP 1	$ 29.55	16.95
GROUP 2	$ 30.05	16.95

GROUP 1: Straight & Dump, Straight Fuel

GROUP 2: Semi Fuel, Semi Tractor, Euclids, Darts, Tank, Asphalt Spreaders, Low Boys, Carry-All, Tourna-Rockers, Hi-Lifts, Extra Long Trailers, Semi-Pole Trailers, Double Hook-Up Tractor Trailers including Team Track & Railroad Siding, Semi-Tractor & Tri-Axle Trailer, Tandem Tractor & Tandem Trailer, Tag Along Trailer, Expandable Trailer or Towing Requiring Road Permits, Ready-Mix (Agitator or Non-Agitator), Bulk Concrete Driver, Dry Batch Truck, Articulated End Dump

---

WELDERS - Receive rate prescribed for craft performing operation to which welding is incidental.

==========

Note: Executive Order (EO) 13706, Establishing Paid Sick Leave for Federal Contractors applies to all contracts subject to the Davis-Bacon Act for which the contract is awarded (and any solicitation was issued) on or after January 1, 2017. If this contract is covered by the EO, the contractor must provide employees with 1 hour of paid sick leave for every 30 hours they work, up to 56 hours of paid sick leave each year. Employees must be permitted to use paid sick leave for their own illness, injury or other health-related needs, including preventive care; to assist a family member (or person who is like family to the employee) who is ill, injured, or has other health-related needs, including preventive care; or for reasons resulting from, or to assist a family member (or person who is like family to the employee) who is a victim of, domestic violence, sexual assault, or stalking. Additional information on contractor requirements and worker protections under the EO is available at www.dol.gov/whd/govcontracts.

Unlisted classifications needed for work not included within the scope of the classifications listed may be added after award only as provided in the labor standards contract clauses (29CFR 5.5 (a) (1) (ii)).

The body of each wage determination lists the classification and wage rates that have been found to be prevailing for the cited type(s) of construction in the area covered by the wage determination. The classifications are listed in alphabetical order of ""identifiers"" that indicate whether the particular rate is a union rate (current union negotiated rate for local), a survey rate (weighted average rate) or a union average rate (weighted union average rate).

Union Rate Identifiers

A four letter classification abbreviation identifier enclosed

in dotted lines beginning with characters other than ""SU"" or ""UAVG"" denotes that the union classification and rate were prevailing for that classification in the survey. Example: PLUM0198-005 07/01/2014. PLUM is an abbreviation identifier of the union which prevailed in the survey for this classification, which in this example would be Plumbers. 0198 indicates the local union number or district council number where applicable, i.e., Plumbers Local 0198. The next number, 005 in the example, is an internal number used in processing the wage determination. 07/01/2014 is the effective date of the most current negotiated rate, which in this example is July 1, 2014.

Union prevailing wage rates are updated to reflect all rate changes in the collective bargaining agreement (CBA) governing this classification and rate.

Survey Rate Identifiers

Classifications listed under the ""SU"" identifier indicate that no one rate prevailed for this classification in the survey and the published rate is derived by computing a weighted average rate based on all the rates reported in the survey for that classification. As this weighted average rate includes all rates reported in the survey, it may include both union and non-union rates. Example: SULA2012-007 5/13/2014. SU indicates the rates are survey rates based on a weighted average calculation of rates and are not majority rates. LA indicates the State of Louisiana. 2012 is the year of survey on which these classifications and rates are based. The next number, 007 in the example, is an internal number used in producing the wage determination. 5/13/2014 indicates the survey completion date for the classifications and rates under that identifier.

Survey wage rates are not updated and remain in effect until a new survey is conducted.

Union Average Rate Identifiers

Classification(s) listed under the UAVG identifier indicate that no single majority rate prevailed for those classifications; however, 100% of the data reported for the classifications was union data. EXAMPLE: UAVG-OH-0010 08/29/2014. UAVG indicates that the rate is a weighted union average rate. OH indicates the state. The next number, 0010 in the example, is an internal number used in producing the wage

determination. 08/29/2014 indicates the survey completion date for the classifications and rates under that identifier.

A UAVG rate will be updated once a year, usually in January of each year, to reflect a weighted average of the current negotiated/CBA rate of the union locals from which the rate is based.

WAGE DETERMINATION APPEALS PROCESS

1.) Has there been an initial decision in the matter? This can be:

* an existing published wage determination
* a survey underlying a wage determination
* a Wage and Hour Division letter setting forth a position on a wage determination matter
* a conformance (additional classification and rate) ruling

On survey related matters, initial contact, including requests for summaries of surveys, should be with the Wage and Hour Regional Office for the area in which the survey was conducted because those Regional Offices have responsibility for the Davis-Bacon survey program. If the response from this initial contact is not satisfactory, then the process described in 2.) and 3.) should be followed.

With regard to any other matter not yet ripe for the formal process described here, initial contact should be with the Branch of Construction Wage Determinations. Write to:

Branch of Construction Wage Determinations
Wage and Hour Division
U.S. Department of Labor
200 Constitution Avenue, N.W.
Washington, DC 20210

2.) If the answer to the question in 1.) is yes, then an interested party (those affected by the action) can request review and reconsideration from the Wage and Hour Administrator (See 29 CFR Part 1.8 and 29 CFR Part 7). Write to:

Wage and Hour Administrator
U.S. Department of Labor
200 Constitution Avenue, N.W.
Washington, DC 20210

The request should be accompanied by a full statement of the interested party's position and by any information (wage payment data, project description, area practice material, etc.) that the requestor considers relevant to the issue.

3.) If the decision of the Administrator is not favorable, an interested party may appeal directly to the Administrative Review Board (formerly the Wage Appeals Board). Write to:

Administrative Review Board
U.S. Department of Labor
200 Constitution Avenue, N.W.
Washington, DC 20210

4.) All decisions by the Administrative Review Board are final.

==========

END OF GENERAL DECISION"

History

- **Apr 30, 2021**OH20210001 - Modification 4
- **Apr 30, 2021**OH20210001 - Modification 3
- **Apr 23, 2021**OH20210001 - Modification 2
- **Feb 12, 2021**OH20210001 - Modification 1
- **Jan 22, 2021**OH20210001 - Modification 0

BID FORMS

SECTION F

PICKERING ASSOCIATES
Architects • Engineers • Surveyors

2099 State Street Suite B • Athens, OH 45701
p. 740.593.3327 • t. 800.954.5305 • f. 800.689.3755
www.pickeringusa.com

Bid Unit Prices

The following items are requested to be designated as Unit Prices for bidding purposes.

- **Item Information:**
  - ODOT Item No. 202E23000 – Pavement Removed — Price per SY: $_____
  - ODOT Item No. 203E10000 – Excavation — Price per CY: $_____
  - ODOT Item No. 304E20000 – Aggregate Base — Price per CY: $_____
  - ODOT Item No. 441E50000 – Asphalt Concrete Surface Course — Price per CY: $_____
  - ODOT Item No. 301E46000 – Asphalt Concrete Base, PG64-22 — Price per CY: $_____
  - ODOT Type 2 Structural Backfill / Pipe Bedding — Price per CY: $_____
  - ODOT 10" Conduit, Type B (10" SDR 26 Gravity Sewer): — Price per FT: $_____
  - Manhole Rehabilitation: — Price per Vert. Ft. $_____

BID OPENING

PLACE: Athens County Commissioners
15 South Court Street (2nd Floor)
Athens, OH 45701

DATE: Tuesday, May 25th, 2021 @ 10:15am

Proposal of _____ (hereinafter called "Bidder") a (circle one) Corporation / Partnership / LLC / Sole Proprietor, organized and existing under the laws of the State of _____, doing business as

_____.

TO THE «COMMISSIONER» (hereinafter called "Owner"):

The Bidder, in compliance with your invitation for bids for the furnishing of materials and/or equipment for the Chauncey OH - Sanitary Sewer Facility Improvements project, having examined the specifications with related documents, hereby proposes to furnish all materials and supplies in accordance with the contract documents, within the time set forth therein, and at the process stated below. These prices are to cover all expenses incurred in performing the work required under the contract documents of which this proposal is a part.

Bidder hereby agrees to commence work under this contract on or before a date to be specified in written "Notice to Proceed" of the Owner and to fully complete the project within 90 consecutive calendar days thereafter as stipulated in the specifications. Bidder further agrees to pay liquidated damages, the sum of $100.00 for each consecutive calendar day thereafter as hereinafter provided in Paragraph 29 of the General Contract Conditions.

Bidder acknowledges receipt of the following addendum(s):

_____

Bidder agrees to provide all of the Chauncey OH - Sanitary Sewer Facility Improvements Project materials and/or equipment described in the Base Bid specifications and shown on the plans (if applicable) for the total amount of the bid based on the approximate quantities listed on the following pages. The unit prices specified by the bidder amount to the sum of:

TOTAL BID PER UNIT PRICE PROPOSAL $_____

IN WORDS _____

Amounts are to be shown in both words and figures. In case of a discrepancy, amount shown in words will govern.

All unit prices shall include all labor, materials, bailing, shoring, removal, overhead, profit, insurance, etc., to cover providing the materials/equipment called for.

The Bidder understands that the Owner reserves the right to reject any or all bids and to waive any informalities in the bidding process.

The bidder agrees that this bid shall be good and may not be withdrawn for a period of 90 calendar days after the scheduled closing time for receiving bids.

Upon receipt of written notice of the acceptance of this bid, Bidder will execute the formal contract attached within 10 days and deliver a Surety Bond or Bonds as required by Article 12, Section C of the General Contract Conditions. The bid security attached in the sum of $_____(in words)_ _____ is to become the property of the Owner in the event the contract and bond are not executed within the time above set forth, as liquidated damages for the delay and additional expense to the Owner caused thereby.

RESPECTFULLY SUBMITTED:

BY_____

TITLE_____

BUSINESS NAME AND ADDRESS:

_____

_____

_____

PHONE_____

FED. ID OR SS#_____

SEAL
(If Applicable)

BID GUARANTY AND CONTRACT BOND

(SECTION 153.571 Ohio Revised Code)

KNOW ALL MEN BY THESE PRESENTS, that we, the undersigned _____

_____
(Name and Address)
as Principal and _____
(Name of Surety)
_____ as Surety,

are hereby held and firmly bound unto the Athens Co. Commissioners as Obligee in the penal sum of the dollar amount of the bid submitted by the Principal to the Obligee on _____ to undertake the project known as: Chauncey OH - Sanitary Sewer Facility Improvements

The penal sum referred to herein shall be the dollar amount of the Principal's bid to the Obligee, incorporating any additive or deductive alternate proposals made by the Principal on the date referred to above to the Obligee, which are accepted by the Obligee. In no case shall the penal sum exceed the amount of dollars ($_____ _____). (If the above line is left blank, the penal sum will be the full amount of the Principal's bid including alternates, in dollars and cents. A percentage is not acceptable.) For the payment of the penal sum well and truly to be made, we hereby jointly and severally bind ourselves, our heirs, executors, administrators, successors, and assigns.

THE CONDITION OF THE ABOVE OBLIGATION IS SUCH, that whereas the above named Principal has submitted a bid on the above referred to project;

NOW, THEREFORE, if the Obligee accepts the bid of the Principal and the Principal fails to enter into a proper contract in accordance with bid, plans, details, specifications, and bills of material; and in the event the Principal pays to the Obligee the difference not to exceed ten percent of the penalty hereof between the amount specified in the bid, or the costs, in connection with the resubmission, of printing new contract documents, required advertising and printing and mailing notices to prospective bidders, whichever is less, then this obligation shall be null and void, otherwise to remain in full force and effect. If the Obligee accepts the bid of the Principal and the Principal, within ten (10) days after the awarding of the contract, enters into a proper contract in accordance with the bid, plans, details, specifications, and bills of material, which said contract is made a part of this bond the same as though set forth herein; and IF THE SAID Principal shall well and faithfully perform each and every condition of such contract; and indemnify the Obligee against all damage suffered by failure to perform such contract according to the provisions thereof and in accordance with the plans, details, specifications, and bills of material therefore; and shall pay all lawful claims of subcontractors, materialmen, and laborers, for labor performed and materials furnished in the carrying forward, performing, or completing of said contract; we agreeing and assenting that this undertaking shall be for benefit of any materialman or laborer having a just claim, as well as for the Obligee herein; then this obligation shall be void; otherwise the same shall remain in full force and effect; it being expressly understood and agreed that the liability of the Surety for any and all claims hereunder shall in no event exceed the penal amount of this obligation as herein stated.

THE SAID Surety hereby stipulates and agrees that no modifications, omissions, or additions, in or to the terms of said contract or in or to the plans and specifications therefore shall in any way affect the obligations of said Surety on this bond, and it does hereby waive notice of any such modifications, omissions or additions to the term of the contract or to the work or to the specifications.

SIGNED AND SEALED This _____ day of _____, _____.

_____
Principal

By: _____

Title: _____

_____
Surety

By: _____

Attorney-in-Fact

Surety Company Address:

_____

_____

_____

Surety Agent's Name and Address:

_____

_____

_____

AFFIDAVIT OF CONTRACTOR OR SUPPLIER OF NON-DELINQUENCY OF PERSONAL PROPERTY TAXES

O.R.C. 5919.042

STATE OF OHIO:

SS:

TO: Athens County Commissioners

The undersigned, being first duly sworn, having been awarded a contract by you for Chauncey OH - Sanitary Sewer Facility Improvements hereby states that we are not charged at the time the proposal was submitted with any delinquent personal property taxes on the general tax list of personal property of any county in which you as a taxing district have territory and that we were not charged with delinquent personal property taxes on any such tax list.

In consideration of the award of the above contract, the above statement is incorporated in said contract as a covenant of the undersigned.

_____

Subscribed and sworn to before me this ____day of_____, _____.

_____

Notary Public

_____

My Commission Expires

SEAL

NON-COLLUSION AFFIDAVIT

State of Ohio

County of Athens

BID Identification Chauncey OH - Sanitary Sewer Facility Improvements

CONTRACTOR _____

being duly sworn, deposed and says that he is _____(Sole owner, a partner, president, secretary, etc.) of _____, the party making the foregoing BID; that such BID is not made in the interest of or on behalf of any undisclosed person, partnership, company, association, organization, or corporation; that such BID is genuine and not collusive or sham; that said BIDDER has not directly or indirectly induced or solicited any other BIDDER to put in a fake or sham BID and has not directly or indirectly colluded, conspired, connived, or agreed with any BIDDER or anyone else to put in a sham BID, or that any one shall refrain from bidding; that said BIDDER has not in any manner directly or indirectly, sought by agreement, communication or conference with anyone to fix the BID price of said BIDDER or of any other BIDDER, or to fix any overhead, profit, or cost element of such BID price, or of that of any other BIDDER, or to secure any advantage against the OWNER awarding the contract or anyone interested in the proposed contract; that all statements contained in such BID are true; and, further, that said BIDDER has not, directly or indirectly, submitted his BID price or any breakdown thereof, or the contents thereof, or divulged information or data relative thereto, or paid and will not pay any fee in connection therewith, to any corporation, partnership, company, association, organization, BID depository, or to any member or agent thereof, or to any other individual except to such person or persons as have a partnership or other financial interest with said BIDDER in his general business.

Signed:

SIGN HERE

_____

Subscribed and sworn to before me this ____day of_____, _____.

SIGN HERE

_____

Notary Public

_____

My Commission Expires

SEAL

CERTIFICATION REGARDING
DEBARMENT, SUSPENSION, AND OTHER RESPONSIBILITY MATTERS
PRIMARY COVERED TRANSACTIONS

This certification is required by the regulations implementing Executive Order 12549, Debarment and Suspension, 34 CFR Part 85, Section 85.510, Participant's responsibilities. The regulations were published as Part VII of the May 26, 1988 Federal Register (pages 19160 - 19211). Copies of the regulation may be obtained by contacting the U.S. Department of Education, Grants and Contracts Service, 400 Maryland Avenue, S.W. (Room 3633 GSA Regional Office Building No. 3), Washington, DC. 20202-4725, telephone (202) 732-2505.

(1) The prospective primary participant certifies to the best of its knowledge and belief, that it and its principals:

(a) Are not presently debarred, suspended, proposed for debarment, declared ineligible, or voluntarily excluded from covered transactions by any Federal department or agency;

(b) Have not within a three-year period preceding this proposal been convicted of or had a civil judgment rendered against them for commission of fraud or a criminal offense in connection with obtaining, attempting to obtain, or performing a public (Federal, State, or Local) transaction or contract under a public transaction; violation of Federal or State antitrust statutes or commission of embezzlement, theft, forgery, bribery, falsification or destruction of records, making false statements, or receiving stolen property;

(c) Are not presently indicted for or otherwise criminally or civilly charged by a governmental entity (Federal, State, or Local) with commission of any of the offenses enumerated in paragraph (1)(b) of this certification; and

(d) Have not within a three-year period preceding this application/proposal had one or more public transactions (Federal, State, or Local) terminated for cause or default.

(2) Where the prospective primary participant is unable to certify to any of the statements in this certification, such prospective participant shall attach an explanation to this proposal.

_____
Organization Name

Chauncey OH - Sanitary Sewer Facility Improvements
_____
PR/Award Number or Project Name

_____
Name and Title of Authorized Representative

SIGN HERE

_____ _____
Signature Date

AFFIDAVIT IN COMPLIANCE WITH SECTION 3517.13
OF THE OHIO REVISED CODE

STATE OF OHIO
COUNTY OF Athens, SS:

Personally appeared before me the undersigned, as an individual or as a representative of

_____ for a contract for Chauncey OH - Sanitary Sewer Facility Improvements
(Name of Entity) (Type of Product or Service)

to be let by the County of Athens, who, being duly cautioned and sworn, makes the following statement with respect to prohibited activities constituting a conflict of interest or other violations under Ohio Revised Code Section 3517.13, and further states that the undersigned has the authority to make the following representation on behalf of himself or of the business entity:

1. That none of the following has individually made within the two previous calendar years and that, if awarded a contract for the purchase of goods or services in excess of $500.00, none of the following individually will make, beginning on the date the contract is awarded and extending until one year following the conclusion of the contract, as an individual, one or more campaign contributions totaling in excess of $1,000.00, to any member of the Athens, County Board of Commissioners or their individual campaign committees:
    a. myself;
    b. any partner or owner or shareholder of the partnership (if applicable);
    c. any owner of more than 20% of the corporation or business trust (if applicable);
    d. each spouse of any person identified in (a) through (c) of this section;
    e. each child seven years of age to seventeen years of age of any person identified in divisions (a) through (c) of this section (only applicable to contributions made on or after January 1, 2007).

2. That none of the following have collectively made since January 1, 2007 and that, if awarded a contract for the purchase of goods or services in excess of $500.00, none of the following collectively will make, beginning on the date the contract is awarded and extending until one year following the conclusion of the contract, one or more campaign contributions totaling in excess of $2,000.00, to any member of the Athens, County Board of Commissioners or their individual campaign committees:
    a. myself;
    b. nay partner or owner or shareholder of the partnership (if applicable);
    c. any owner of more than 20% of the corporation or business trust (if applicable);
    d. each spouse of any person identified in (a) through (c) of this section;
    e. each child seven years of age to seventeen years of age of any person identified in divisions (a) through (c) of this section (only applicable to contributions made on or after January 1, 2007).

SIGN HERE

Signature _____

Title: _____

Sworn to before me and subscribed in my presence this _____ day of _____, 20_____.

SIGN HERE

Notary Public _____

My Commission Expires: _____

SEAL

ADDITIONAL CERTIFICATIONS

Project Name: Chauncey OH - Sanitary Sewer Facility Improvements

Grant Number: B-X-19-1AE-1

I certify that my company has the *facilities* to complete this job.

I certify that my company has the *labor force* to complete this job.

I certify that my company has the *equipment* to complete this job.

I certify that my company has the *administrative capacity* to complete this job.

I certify that my company has the *knowledge* to complete this job.

I certify that my company maintains a *drug free workplace.*

_____

Name and Title of Authorized Representative

SIGN HERE

_____

Signature & Date

BONDING AND INSURANCE REQUIREMENTS

A state or local unit of government receiving a grant from the Federal government which requires contracting for construction of facility improvement shall follow its own requirement relating to bid guarantees, performance bonds, and payment bonds, except for contracts or subcontracts exceeding $100,000.00. For contracts or subcontracts exceeding $100,000.00, the Federal agency may accept the bonding policy requirement of the grantee provided the Federal agency has made a determination that the Government's interest in adequately protected. If such a determination has not been made, the minimum requirements shall be as follows:

A. A bid guarantee from each bidder equivalent to ten percent of the bid price. The "bid guarantee" shall consist of a firm commitment such as a bid bond, certified check, or other negotiable instrument accompanying a bid as assurance that the bidder will, upon acceptance of his/her bid, execute such contractual documents as may be required within the time specified.

B. A performance bond on the part of the contractor for 100 percent of the contract price. A "performance bond" is one executed in connection with a contract to secure fulfillment of all the contractor's obligations under such contract.

C. A payment bond on the part of the contractor for 100 percent of the contract price. A "payment bond" is one executed in connection with a contract to assure payment as required by law of all persons supplying labor and material in the execution of the work provided for in the contract.

EXPERIENCE STATEMENT OF BIDDER

The BIDDER/CONTRACTOR is required to state in detail, in the space provided below, what work of character similar to that included in this proposed Contract Documents it has done, to give reference and such other detailed information as it will enable the OWNER to determine responsibility including experience, skill and financial standing.

PROJECT NAME: _____ CONTACT: _____

ADDRESS: _____

PHONE: _____ FAX: _____

EMAIL: _____ DATE OF PROJECT: _____

DESCRIPTION OF WORK: _____

PROJECT NAME: _____ CONTACT: _____

ADDRESS: _____

PHONE: _____ FAX: _____

EMAIL: _____ DATE OF PROJECT: _____

DESCRIPTION OF WORK: _____

PROJECT NAME: _____ CONTACT: _____

ADDRESS: _____

PHONE: _____ FAX: _____

EMAIL: _____ DATE OF PROJECT: _____

DESCRIPTION OF WORK: _____

PROJECT NAME: _____ CONTACT: _____

ADDRESS: _____

PHONE: _____ FAX: _____

EMAIL: _____ DATE OF PROJECT: _____

DESCRIPTION OF WORK: _____

Ohio | Department of Taxation
tax.ohio.gov

Reset Form

STEC CO
Rev. 11/10

Sales and Use Tax
Contractor's Exemption Certificate

Identification of Contract:

Contractee's (owner's) name _____

Exact location of job/project _____

Name of job/project as it appears on contract documentation _____

The undersigned hereby certifies that the tangible personal property purchased under this exemption from:

_____
Vendor's name

was purchased for incorporation into:

☐	Real property under a construction contract with the United States government, its agencies, the state of Ohio, or an Ohio political subdivision;	☐	Real property that is owned, or will be accepted for ownership at the time of completion, by the United States government, its agencies, the state of Ohio or an Ohio political subdivision;
☐	A horticulture structure or livestock structure for a person engaged in the business of horticulture or producing livestock;	☐	A house of public worship or religious education;
☐	A building used exclusively for charitable purposes by a nonprofit organization operated exclusively for charitable purposes as defined in Ohio Revised Code (R.C.) section 5739.02(B)(12);	☐	A building under a construction contract with an organization exempt from taxation under section 501(c)(3) of the Internal Revenue Code of 1986 when the building is to be used exclusively for the organization's exempt purposes;
☐	The original construction of a sports facility under R.C. section 307.696;	☐	A hospital facility entitled to exemption under R.C. section 140.08;
☐	Real property outside this state if such materials and services, when sold to a construction contractor in the state in which the real property is located for incorporation into real property in that state, would be exempt from a tax on sales levied by that state;	☐	Building and construction materials and services sold for incorporation into real property comprising a convention center that qualifies for property tax exemption under R.C. 5709.084 (until one calendar year after the construction is completed).

This certificate may be used by a contractee or subcontractor when buying materials for a construction contract where the owner/contractee has claimed one of the above exemptions. This certificate covers all sales of materials by the above-named vendor to the contractor or subcontractor for this particular construction contract only.

Contractor/subcontractor

_____
Name

_____
Signed by Title

_____
Street address

_____
City, state, ZIP code

_____
Date

********** FOR INSTRUCTIONAL USE ONLY **********

READ BEFORE COMPLETING YOUR DMA FORM

Forms not conforming to the specifications listed below or not submitted to the appropriate agency or office will not be processed.

- To complete this form, you will need a copy of the Terrorist Exclusion List for reference. The Terrorist Exclusion List can be found on the Ohio Homeland Security Web site at the following address:

  http://www.homelandsecurity.ohio.gov/dma/dma.asp

- Be sure you have the correct DMA form. If you are applying for a state issued license, permit, certification or registration, the "State Issued License" DMA form must be completed (HLS 0036). If you are applying for employment with a government entity, the "Public Employment" DMA form must be completed (HLS 0037). If you are obtaining a contract to conduct business with or receive funding from a government entity, the "Government Business and Funding Contracts" DMA form must be completed (HLS 0038).

- Your DMA form is to be submitted to the issuing agency or entity. "Issuing agency or entity" means the government agency or office that has requested the form from you or the government agency or office to which you are applying for a license, employment or a business contract. For example, if you are seeking a business contract with the Ohio Department of Commerce's Division of Financial Institutions, then the form needs to be submitted to the Department of Commerce's Division of Financial Institutions. Do NOT send the form to the Ohio Department of Public Safety UNLESS you are seeking a license from or employment or business contract with one of its eight divisions listed below.

- Department of Public Safety Divisions:

  Administration
  Ohio Bureau of Motor Vehicles
  Ohio Emergency Management Agency
  Ohio Emergency Medical Services
  Ohio Homeland Security*
  Ohio Investigative Unit
  Ohio Criminal Justice Services
  Ohio State Highway Patrol

- * DO **NOT** SEND THE FORM TO OHIO HOMELAND SECURITY UNLESS OTHERWISE DIRECTED. FORMS SENT TO THE WRONG AGENCY OR ENTITY WILL NOT BE PROCESSED.

********** FOR INSTRUCTIONAL USE ONLY **********

OHIO DEPARTMENT OF PUBLIC SAFETY
EDUCATION · SERVICE · PROTECTION

OHIO DEPARTMENT OF PUBLIC SAFETY
DIVISION OF HOMELAND SECURITY
http://www.homelandsecurity.ohio.gov

PUBLIC EMPLOYMENT

In accordance with section 2909.34 of the Ohio Revised Code

DECLARATION REGARDING MATERIAL ASSISTANCE/NONASSISTANCE TO A TERRORIST ORGANIZATION

This form serves as a declaration by an applicant for public employment of material assistance/nonassistance to an organization on the U.S. Department of State Terrorist Exclusion List ("TEL"). Please see the Ohio Homeland Security Division Web site for a copy of the TEL.

Any answer of "yes" to any question, or the failure to answer "no" to any question on this declaration shall serve as a disclosure that material assistance to an organization identified on the U.S. Department of State Terrorist Exclusion List has been provided. Failure to disclose the provision of material assistance to such an organization or knowingly making false statements regarding material assistance to such an organization is a felony of the fifth degree.

For the purposes of this declaration, "material support or resources" means currency, payment instruments, other financial securities, funds, transfer of funds, financial services, communications, lodging, training, safe houses, false documentation or identification, communications equipment, facilities, weapons, lethal substances, explosives, personnel, transportation, and other physical assets, except medicine or religious materials.

LAST NAME	FIRST NAME	MIDDLE INITIAL
HOME ADDRESS		
CITY / STATE / ZIP / COUNTY		
HOME PHONE ( ) -	WORK PHONE ( ) -	

DECLARATION

In accordance with section 2909.32 (A)(2)(b) of the Ohio Revised Code

For each question, indicate either "yes," or "no" in the space provided. Responses must be truthful to the best of your knowledge.

1. Are you a member of an organization on the U.S. Department of State Terrorist Exclusion List? ☐ Yes ☐ No
2. Have you used any position of prominence you have with any country to persuade others to support an organization on the U.S. Department of State Terrorist Exclusion List? ☐ Yes ☐ No
3. Have you knowingly solicited funds or other things of value for an organization on the U.S. Department of State Terrorist Exclusion List? ☐ Yes ☐ No
4. Have you solicited any individual for membership in an organization on the U.S. Department of State Terrorist Exclusion List? ☐ Yes ☐ No
5. Have you committed an act that you know, or reasonably should have known, affords "material support or resources" to an organization on the U.S. Department of State Terrorist Exclusion List? ☐ Yes ☐ No
6. Have you hired or compensated a person you knew to be a member of an organization on the U.S. Department of State Terrorist Exclusion List, or a person you knew to be engaged in planning, assisting, or carrying out an act of terrorism? ☐ Yes ☐ No

If an applicant's employment is denied due to a positive indication on this form, the applicant may request the Ohio Department of Public Safety to review the denial. Please see the Ohio Homeland Security Web site for information on how to file a request for review.

CERTIFICATION

I hereby certify that the answers I have made to all of the questions on this declaration are true to the best of my knowledge. I understand that if this declaration is not completed in its entirety, it will not be processed and I will be automatically disqualified. I understand that I am responsible for the correctness of this declaration. I understand that failure to disclose the provision of material assistance to an organization identified on the U.S. Department of State Terrorist Exclusion List, or knowingly making false statements regarding material assistance to such an organization is a felony of the fifth degree. I understand that any answer of "yes" to any question, or the failure to answer "no" to any question on this declaration shall serve as a disclosure that material assistance to an organization identified on the U.S. Department of State Terrorist Exclusion List has been provided by myself or my organization. If I am signing this on behalf of a company, business or organization, I hereby acknowledge that I have the authority to make this certification on behalf of the company, business or organization referenced above.

APPLICANT SIGNATURE	DATE
X	

Form **W-9**
(Rev. December 2014)
Department of the Treasury
Internal Revenue Service

Request for Taxpayer Identification Number and Certification

Give Form to the requester. Do not send to the IRS.

Print or type
See Specific Instructions on page 2.

1 Name (as shown on your income tax return). Name is required on this line; do not leave this line blank.

2 Business name/disregarded entity name, if different from above

3 Check appropriate box for federal tax classification; check only **one** of the following seven boxes:

☐ Individual/sole proprietor or single-member LLC ☐ C Corporation ☐ S Corporation ☐ Partnership ☐ Trust/estate

☐ Limited liability company. Enter the tax classification (C=C corporation, S=S corporation, P=partnership) ▶ _____

Note. For a single-member LLC that is disregarded, do not check LLC; check the appropriate box in the line above for the tax classification of the single-member owner.

☐ Other (see instructions) ▶

4 Exemptions (codes apply only to certain entities, not individuals; see instructions on page 3):

Exempt payee code (if any) _____

Exemption from FATCA reporting code (if any) _____

(Applies to accounts maintained outside the U.S.)

5 Address (number, street, and apt. or suite no.)

Requester's name and address (optional)

6 City, state, and ZIP code

7 List account number(s) here (optional)

Part I Taxpayer Identification Number (TIN)

Enter your TIN in the appropriate box. The TIN provided must match the name given on line 1 to avoid backup withholding. For individuals, this is generally your social security number (SSN). However, for a resident alien, sole proprietor, or disregarded entity, see the Part I instructions on page 3. For other entities, it is your employer identification number (EIN). If you do not have a number, see *How to get a TIN* on page 3.

Note. If the account is in more than one name, see the instructions for line 1 and the chart on page 4 for guidelines on whose number to enter.

Social security number

			–			–				

or

Employer identification number

		–							

Part II Certification

Under penalties of perjury, I certify that:

1. The number shown on this form is my correct taxpayer identification number (or I am waiting for a number to be issued to me); and
2. I am not subject to backup withholding because: (a) I am exempt from backup withholding, or (b) I have not been notified by the Internal Revenue Service (IRS) that I am subject to backup withholding as a result of a failure to report all interest or dividends, or (c) the IRS has notified me that I am no longer subject to backup withholding; and
3. I am a U.S. citizen or other U.S. person (defined below); and
4. The FATCA code(s) entered on this form (if any) indicating that I am exempt from FATCA reporting is correct.

Certification instructions. You must cross out item 2 above if you have been notified by the IRS that you are currently subject to backup withholding because you have failed to report all interest and dividends on your tax return. For real estate transactions, item 2 does not apply. For mortgage interest paid, acquisition or abandonment of secured property, cancellation of debt, contributions to an individual retirement arrangement (IRA), and generally, payments other than interest and dividends, you are not required to sign the certification, but you must provide your correct TIN. See the instructions on page 3.

Sign Here | **Signature of U.S. person** ▶ | **Date** ▶

General Instructions

Section references are to the Internal Revenue Code unless otherwise noted.

Future developments. Information about developments affecting Form W-9 (such as legislation enacted after we release it) is at *www.irs.gov/fw9*.

Purpose of Form

An individual or entity (Form W-9 requester) who is required to file an information return with the IRS must obtain your correct taxpayer identification number (TIN) which may be your social security number (SSN), individual taxpayer identification number (ITIN), adoption taxpayer identification number (ATIN), or employer identification number (EIN), to report on an information return the amount paid to you, or other amount reportable on an information return. Examples of information returns include, but are not limited to, the following:

- Form 1099-INT (interest earned or paid)
- Form 1099-DIV (dividends, including those from stocks or mutual funds)
- Form 1099-MISC (various types of income, prizes, awards, or gross proceeds)
- Form 1099-B (stock or mutual fund sales and certain other transactions by brokers)
- Form 1099-S (proceeds from real estate transactions)
- Form 1099-K (merchant card and third party network transactions)
- Form 1098 (home mortgage interest), 1098-E (student loan interest), 1098-T (tuition)
- Form 1099-C (canceled debt)
- Form 1099-A (acquisition or abandonment of secured property)

Use Form W-9 only if you are a U.S. person (including a resident alien), to provide your correct TIN.

If you do not return Form W-9 to the requester with a TIN, you might be subject to backup withholding. See *What is backup withholding?* on page 2.

By signing the filled-out form, you:

1. Certify that the TIN you are giving is correct (or you are waiting for a number to be issued),
2. Certify that you are not subject to backup withholding, or
3. Claim exemption from backup withholding if you are a U.S. exempt payee. If applicable, you are also certifying that as a U.S. person, your allocable share of any partnership income from a U.S. trade or business is not subject to the withholding tax on foreign partners' share of effectively connected income, and
4. Certify that FATCA code(s) entered on this form (if any) indicating that you are exempt from the FATCA reporting, is correct. See *What is FATCA reporting?* on page 2 for further information.

Note. If you are a U.S. person and a requester gives you a form other than Form W-9 to request your TIN, you must use the requester's form if it is substantially similar to this Form W-9.

Definition of a U.S. person. For federal tax purposes, you are considered a U.S. person if you are:

- An individual who is a U.S. citizen or U.S. resident alien;
- A partnership, corporation, company, or association created or organized in the United States or under the laws of the United States;
- An estate (other than a foreign estate); or
- A domestic trust (as defined in Regulations section 301.7701-7).

Special rules for partnerships. Partnerships that conduct a trade or business in the United States are generally required to pay a withholding tax under section 1446 on any foreign partners' share of effectively connected taxable income from such business. Further, in certain cases where a Form W-9 has not been received, the rules under section 1446 require a partnership to presume that a partner is a foreign person, and pay the section 1446 withholding tax. Therefore, if you are a U.S. person that is a partner in a partnership conducting a trade or business in the United States, provide Form W-9 to the partnership to establish your U.S. status and avoid section 1446 withholding on your share of partnership income.

In the cases below, the following person must give Form W-9 to the partnership for purposes of establishing its U.S. status and avoiding withholding on its allocable share of net income from the partnership conducting a trade or business in the United States:

- In the case of a disregarded entity with a U.S. owner, the U.S. owner of the disregarded entity and not the entity;
- In the case of a grantor trust with a U.S. grantor or other U.S. owner, generally, the U.S. grantor or other U.S. owner of the grantor trust and not the trust; and
- In the case of a U.S. trust (other than a grantor trust), the U.S. trust (other than a grantor trust) and not the beneficiaries of the trust.

Foreign person. If you are a foreign person or the U.S. branch of a foreign bank that has elected to be treated as a U.S. person, do not use Form W-9. Instead, use the appropriate Form W-8 or Form 8233 (see Publication 515, Withholding of Tax on Nonresident Aliens and Foreign Entities).

Nonresident alien who becomes a resident alien. Generally, only a nonresident alien individual may use the terms of a tax treaty to reduce or eliminate U.S. tax on certain types of income. However, most tax treaties contain a provision known as a "saving clause." Exceptions specified in the saving clause may permit an exemption from tax to continue for certain types of income even after the payee has otherwise become a U.S. resident alien for tax purposes.

If you are a U.S. resident alien who is relying on an exception contained in the saving clause of a tax treaty to claim an exemption from U.S. tax on certain types of income, you must attach a statement to Form W-9 that specifies the following five items:

1. The treaty country. Generally, this must be the same treaty under which you claimed exemption from tax as a nonresident alien.

2. The treaty article addressing the income.

3. The article number (or location) in the tax treaty that contains the saving clause and its exceptions.

4. The type and amount of income that qualifies for the exemption from tax.

5. Sufficient facts to justify the exemption from tax under the terms of the treaty article.

Example. Article 20 of the U.S.-China income tax treaty allows an exemption from tax for scholarship income received by a Chinese student temporarily present in the United States. Under U.S. law, this student will become a resident alien for tax purposes if his or her stay in the United States exceeds 5 calendar years. However, paragraph 2 of the first Protocol to the U.S.-China treaty (dated April 30, 1984) allows the provisions of Article 20 to continue to apply even after the Chinese student becomes a resident alien of the United States. A Chinese student who qualifies for this exception (under paragraph 2 of the first protocol) and is relying on this exception to claim an exemption from tax on his or her scholarship or fellowship income would attach to Form W-9 a statement that includes the information described above to support that exemption.

If you are a nonresident alien or a foreign entity, give the requester the appropriate completed Form W-8 or Form 8233.

Backup Withholding

What is backup withholding? Persons making certain payments to you must under certain conditions withhold and pay to the IRS 28% of such payments. This is called "backup withholding." Payments that may be subject to backup withholding include interest, tax-exempt interest, dividends, broker and barter exchange transactions, rents, royalties, nonemployee pay, payments made in settlement of payment card and third party network transactions, and certain payments from fishing boat operators. Real estate transactions are not subject to backup withholding.

You will not be subject to backup withholding on payments you receive if you give the requester your correct TIN, make the proper certifications, and report all your taxable interest and dividends on your tax return.

Payments you receive will be subject to backup withholding if:

1. You do not furnish your TIN to the requester,

2. You do not certify your TIN when required (see the Part II instructions on page 3 for details),

3. The IRS tells the requester that you furnished an incorrect TIN,

4. The IRS tells you that you are subject to backup withholding because you did not report all your interest and dividends on your tax return (for reportable interest and dividends only), or

5. You do not certify to the requester that you are not subject to backup withholding under 4 above (for reportable interest and dividend accounts opened after 1983 only).

Certain payees and payments are exempt from backup withholding. See *Exempt payee code* on page 3 and the separate Instructions for the Requester of Form W-9 for more information.

Also see *Special rules for partnerships* above.

What is FATCA reporting?

The Foreign Account Tax Compliance Act (FATCA) requires a participating foreign financial institution to report all United States account holders that are specified United States persons. Certain payees are exempt from FATCA reporting. See *Exemption from FATCA reporting code* on page 3 and the Instructions for the Requester of Form W-9 for more information.

Updating Your Information

You must provide updated information to any person to whom you claimed to be an exempt payee if you are no longer an exempt payee and anticipate receiving reportable payments in the future from this person. For example, you may need to provide updated information if you are a C corporation that elects to be an S corporation, or if you no longer are tax exempt. In addition, you must furnish a new Form W-9 if the name or TIN changes for the account; for example, if the grantor of a grantor trust dies.

Penalties

Failure to furnish TIN. If you fail to furnish your correct TIN to a requester, you are subject to a penalty of $50 for each such failure unless your failure is due to reasonable cause and not to willful neglect.

Civil penalty for false information with respect to withholding. If you make a false statement with no reasonable basis that results in no backup withholding, you are subject to a $500 penalty.

Criminal penalty for falsifying information. Willfully falsifying certifications or affirmations may subject you to criminal penalties including fines and/or imprisonment.

Misuse of TINs. If the requester discloses or uses TINs in violation of federal law, the requester may be subject to civil and criminal penalties.

Specific Instructions

Line 1

You must enter one of the following on this line; **do not** leave this line blank. The name should match the name on your tax return.

If this Form W-9 is for a joint account, list first, and then circle, the name of the person or entity whose number you entered in Part I of Form W-9.

a. **Individual.** Generally, enter the name shown on your tax return. If you have changed your last name without informing the Social Security Administration (SSA) of the name change, enter your first name, the last name as shown on your social security card, and your new last name.

Note. ITIN applicant: Enter your individual name as it was entered on your Form W-7 application, line 1a. This should also be the same as the name you entered on the Form 1040/1040A/1040EZ you filed with your application.

b. **Sole proprietor or single-member LLC.** Enter your individual name as shown on your 1040/1040A/1040EZ on line 1. You may enter your business, trade, or "doing business as" (DBA) name on line 2.

c. **Partnership, LLC that is not a single-member LLC, C Corporation, or S Corporation.** Enter the entity's name as shown on the entity's tax return on line 1 and any business, trade, or DBA name on line 2.

d. **Other entities.** Enter your name as shown on required U.S. federal tax documents on line 1. This name should match the name shown on the charter or other legal document creating the entity. You may enter any business, trade, or DBA name on line 2.

e. **Disregarded entity.** For U.S. federal tax purposes, an entity that is disregarded as an entity separate from its owner is treated as a "disregarded entity." See Regulations section 301.7701-2(c)(2)(iii). Enter the owner's name on line 1. The name of the entity entered on line 1 should never be a disregarded entity. The name on line 1 should be the name shown on the income tax return on which the income should be reported. For example, if a foreign LLC that is treated as a disregarded entity for U.S. federal tax purposes has a single owner that is a U.S. person, the U.S. owner's name is required to be provided on line 1. If the direct owner of the entity is also a disregarded entity, enter the first owner that is not disregarded for federal tax purposes. Enter the disregarded entity's name on line 2, "Business name/disregarded entity name." If the owner of the disregarded entity is a foreign person, the owner must complete an appropriate Form W-8 instead of a Form W-9. This is the case even if the foreign person has a U.S. TIN.

Line 2

If you have a business name, trade name, DBA name, or disregarded entity name, you may enter it on line 2.

Line 3

Check the appropriate box in line 3 for the U.S. federal tax classification of the person whose name is entered on line 1. Check only one box in line 3.

Limited Liability Company (LLC). If the name on line 1 is an LLC treated as a partnership for U.S. federal tax purposes, check the "Limited Liability Company" box and enter "P" in the space provided. If the LLC has filed Form 8832 or 2553 to be taxed as a corporation, check the "Limited Liability Company" box and in the space provided enter "C" for C corporation or "S" for S corporation. If it is a single-member LLC that is a disregarded entity, do not check the "Limited Liability Company" box; instead check the first box in line 3 "Individual/sole proprietor or single-member LLC."

Line 4, Exemptions

If you are exempt from backup withholding and/or FATCA reporting, enter in the appropriate space in line 4 any code(s) that may apply to you.

Exempt payee code.

- Generally, individuals (including sole proprietors) are not exempt from backup withholding.
- Except as provided below, corporations are exempt from backup withholding for certain payments, including interest and dividends.
- Corporations are not exempt from backup withholding for payments made in settlement of payment card or third party network transactions.
- Corporations are not exempt from backup withholding with respect to attorneys' fees or gross proceeds paid to attorneys, and corporations that provide medical or health care services are not exempt with respect to payments reportable on Form 1099-MISC.

The following codes identify payees that are exempt from backup withholding. Enter the appropriate code in the space in line 4.

1—An organization exempt from tax under section 501(a), any IRA, or a custodial account under section 403(b)(7) if the account satisfies the requirements of section 401(f)(2)

2—The United States or any of its agencies or instrumentalities

3—A state, the District of Columbia, a U.S. commonwealth or possession, or any of their political subdivisions or instrumentalities

4—A foreign government or any of its political subdivisions, agencies, or instrumentalities

5—A corporation

6—A dealer in securities or commodities required to register in the United States, the District of Columbia, or a U.S. commonwealth or possession

7—A futures commission merchant registered with the Commodity Futures Trading Commission

8—A real estate investment trust

9—An entity registered at all times during the tax year under the Investment Company Act of 1940

10—A common trust fund operated by a bank under section 584(a)

11—A financial institution

12—A middleman known in the investment community as a nominee or custodian

13—A trust exempt from tax under section 664 or described in section 4947

The following chart shows types of payments that may be exempt from backup withholding. The chart applies to the exempt payees listed above, 1 through 13.

IF the payment is for . . .	THEN the payment is exempt for . . .
Interest and dividend payments	All exempt payees except for 7
Broker transactions	Exempt payees 1 through 4 and 6 through 11 and all C corporations. S corporations must not enter an exempt payee code because they are exempt only for sales of noncovered securities acquired prior to 2012.
Barter exchange transactions and patronage dividends	Exempt payees 1 through 4
Payments over $600 required to be reported and direct sales over $5,000[1]	Generally, exempt payees 1 through 5[2]
Payments made in settlement of payment card or third party network transactions	Exempt payees 1 through 4

[1] See Form 1099-MISC, Miscellaneous Income, and its instructions.

[2] However, the following payments made to a corporation and reportable on Form 1099-MISC are not exempt from backup withholding: medical and health care payments, attorneys' fees, gross proceeds paid to an attorney reportable under section 6045(f), and payments for services paid by a federal executive agency.

Exemption from FATCA reporting code. The following codes identify payees that are exempt from reporting under FATCA. These codes apply to persons submitting this form for accounts maintained outside of the United States by certain foreign financial institutions. Therefore, if you are only submitting this form for an account you hold in the United States, you may leave this field blank. Consult with the person requesting this form if you are uncertain if the financial institution is subject to these requirements. A requester may indicate that a code is not required by providing you with a Form W-9 with "Not Applicable" (or any similar indication) written or printed on the line for a FATCA exemption code.

A—An organization exempt from tax under section 501(a) or any individual retirement plan as defined in section 7701(a)(37)

B—The United States or any of its agencies or instrumentalities

C—A state, the District of Columbia, a U.S. commonwealth or possession, or any of their political subdivisions or instrumentalities

D—A corporation the stock of which is regularly traded on one or more established securities markets, as described in Regulations section 1.1472-1(c)(1)(i)

E—A corporation that is a member of the same expanded affiliated group as a corporation described in Regulations section 1.1472-1(c)(1)(i)

F—A dealer in securities, commodities, or derivative financial instruments (including notional principal contracts, futures, forwards, and options) that is registered as such under the laws of the United States or any state

G—A real estate investment trust

H—A regulated investment company as defined in section 851 or an entity registered at all times during the tax year under the Investment Company Act of 1940

I—A common trust fund as defined in section 584(a)

J—A bank as defined in section 581

K—A broker

L—A trust exempt from tax under section 664 or described in section 4947(a)(1)

M—A tax exempt trust under a section 403(b) plan or section 457(g) plan

Note. You may wish to consult with the financial institution requesting this form to determine whether the FATCA code and/or exempt payee code should be completed.

Line 5

Enter your address (number, street, and apartment or suite number). This is where the requester of this Form W-9 will mail your information returns.

Line 6

Enter your city, state, and ZIP code.

Part I. Taxpayer Identification Number (TIN)

Enter your TIN in the appropriate box. If you are a resident alien and you do not have and are not eligible to get an SSN, your TIN is your IRS individual taxpayer identification number (ITIN). Enter it in the social security number box. If you do not have an ITIN, see *How to get a TIN* below.

If you are a sole proprietor and you have an EIN, you may enter either your SSN or EIN. However, the IRS prefers that you use your SSN.

If you are a single-member LLC that is disregarded as an entity separate from its owner (see *Limited Liability Company (LLC)* on this page), enter the owner's SSN (or EIN, if the owner has one). Do not enter the disregarded entity's EIN. If the LLC is classified as a corporation or partnership, enter the entity's EIN.

Note. See the chart on page 4 for further clarification of name and TIN combinations.

How to get a TIN. If you do not have a TIN, apply for one immediately. To apply for an SSN, get Form SS-5, Application for a Social Security Card, from your local SSA office or get this form online at *www.ssa.gov*. You may also get this form by calling 1-800-772-1213. Use Form W-7, Application for IRS Individual Taxpayer Identification Number, to apply for an ITIN, or Form SS-4, Application for Employer Identification Number, to apply for an EIN. You can apply for an EIN online by accessing the IRS website at *www.irs.gov/businesses* and clicking on Employer Identification Number (EIN) under Starting a Business. You can get Forms W-7 and SS-4 from the IRS by visiting IRS.gov or by calling 1-800-TAX-FORM (1-800-829-3676).

If you are asked to complete Form W-9 but do not have a TIN, apply for a TIN and write "Applied For" in the space for the TIN, sign and date the form, and give it to the requester. For interest and dividend payments, and certain payments made with respect to readily tradable instruments, generally you will have 60 days to get a TIN and give it to the requester before you are subject to backup withholding on payments. The 60-day rule does not apply to other types of payments. You will be subject to backup withholding on all such payments until you provide your TIN to the requester.

Note. Entering "Applied For" means that you have already applied for a TIN or that you intend to apply for one soon.

Caution: *A disregarded U.S. entity that has a foreign owner must use the appropriate Form W-8.*

Part II. Certification

To establish to the withholding agent that you are a U.S. person, or resident alien, sign Form W-9. You may be requested to sign by the withholding agent even if items 1, 4, or 5 below indicate otherwise.

For a joint account, only the person whose TIN is shown in Part I should sign (when required). In the case of a disregarded entity, the person identified on line 1 must sign. Exempt payees, see *Exempt payee code* earlier.

Signature requirements. Complete the certification as indicated in items 1 through 5 below.

1. Interest, dividend, and barter exchange accounts opened before 1984 and broker accounts considered active during 1983. You must give your correct TIN, but you do not have to sign the certification.

2. Interest, dividend, broker, and barter exchange accounts opened after 1983 and broker accounts considered inactive during 1983. You must sign the certification or backup withholding will apply. If you are subject to backup withholding and you are merely providing your correct TIN to the requester, you must cross out item 2 in the certification before signing the form.

3. Real estate transactions. You must sign the certification. You may cross out item 2 of the certification.

4. Other payments. You must give your correct TIN, but you do not have to sign the certification unless you have been notified that you have previously given an incorrect TIN. "Other payments" include payments made in the course of the requester's trade or business for rents, royalties, goods (other than bills for merchandise), medical and health care services (including payments to corporations), payments to a nonemployee for services, payments made in settlement of payment card and third party network transactions, payments to certain fishing boat crew members and fishermen, and gross proceeds paid to attorneys (including payments to corporations).

5. Mortgage interest paid by you, acquisition or abandonment of secured property, cancellation of debt, qualified tuition program payments (under section 529), IRA, Coverdell ESA, Archer MSA or HSA contributions or distributions, and pension distributions. You must give your correct TIN, but you do not have to sign the certification.

What Name and Number To Give the Requester

For this type of account:	Give name and SSN of:
1. Individual	The individual
2. Two or more individuals (joint account)	The actual owner of the account or, if combined funds, the first individual on the account[1]
3. Custodian account of a minor (Uniform Gift to Minors Act)	The minor[2]
4. a. The usual revocable savings trust (grantor is also trustee)	The grantor-trustee[1]
b. So-called trust account that is not a legal or valid trust under state law	The actual owner[1]
5. Sole proprietorship or disregarded entity owned by an individual	The owner[3]
6. Grantor trust filing under Optional Form 1099 Filing Method 1 (see Regulations section 1.671-4(b)(2)(i)(A))	The grantor*
For this type of account:	**Give name and EIN of:**
7. Disregarded entity not owned by an individual	The owner
8. A valid trust, estate, or pension trust	Legal entity[4]
9. Corporation or LLC electing corporate status on Form 8832 or Form 2553	The corporation
10. Association, club, religious, charitable, educational, or other tax-exempt organization	The organization
11. Partnership or multi-member LLC	The partnership
12. A broker or registered nominee	The broker or nominee
13. Account with the Department of Agriculture in the name of a public entity (such as a state or local government, school district, or prison) that receives agricultural program payments	The public entity
14. Grantor trust filing under the Form 1041 Filing Method or the Optional Form 1099 Filing Method 2 (see Regulations section 1.671-4(b)(2)(i)(B))	The trust

[1] List first and circle the name of the person whose number you furnish. If only one person on a joint account has an SSN, that person's number must be furnished.

[2] Circle the minor's name and furnish the minor's SSN.

[3] You must show your individual name and you may also enter your business or DBA name on the "Business name/disregarded entity" name line. You may use either your SSN or EIN (if you have one), but the IRS encourages you to use your SSN.

[4] List first and circle the name of the trust, estate, or pension trust. (Do not furnish the TIN of the personal representative or trustee unless the legal entity itself is not designated in the account title.) Also see *Special rules for partnerships* on page 2.

*Note. Grantor also must provide a Form W-9 to trustee of trust.

Note. If no name is circled when more than one name is listed, the number will be considered to be that of the first name listed.

Secure Your Tax Records from Identity Theft

Identity theft occurs when someone uses your personal information such as your name, SSN, or other identifying information, without your permission, to commit fraud or other crimes. An identity thief may use your SSN to get a job or may file a tax return using your SSN to receive a refund.

To reduce your risk:

- Protect your SSN,
- Ensure your employer is protecting your SSN, and
- Be careful when choosing a tax preparer.

If your tax records are affected by identity theft and you receive a notice from the IRS, respond right away to the name and phone number printed on the IRS notice or letter.

If your tax records are not currently affected by identity theft but you think you are at risk due to a lost or stolen purse or wallet, questionable credit card activity or credit report, contact the IRS Identity Theft Hotline at 1-800-908-4490 or submit Form 14039.

For more information, see Publication 4535, Identity Theft Prevention and Victim Assistance.

Victims of identity theft who are experiencing economic harm or a system problem, or are seeking help in resolving tax problems that have not been resolved through normal channels, may be eligible for Taxpayer Advocate Service (TAS) assistance. You can reach TAS by calling the TAS toll-free case intake line at 1-877-777-4778 or TTY/TDD 1-800-829-4059.

Protect yourself from suspicious emails or phishing schemes. Phishing is the creation and use of email and websites designed to mimic legitimate business emails and websites. The most common act is sending an email to a user falsely claiming to be an established legitimate enterprise in an attempt to scam the user into surrendering private information that will be used for identity theft.

The IRS does not initiate contacts with taxpayers via emails. Also, the IRS does not request personal detailed information through email or ask taxpayers for the PIN numbers, passwords, or similar secret access information for their credit card, bank, or other financial accounts.

If you receive an unsolicited email claiming to be from the IRS, forward this message to *phishing@irs.gov*. You may also report misuse of the IRS name, logo, or other IRS property to the Treasury Inspector General for Tax Administration (TIGTA) at 1-800-366-4484. You can forward suspicious emails to the Federal Trade Commission at: *spam@uce.gov* or contact them at *www.ftc.gov/idtheft* or 1-877-IDTHEFT (1-877-438-4338).

Visit IRS.gov to learn more about identity theft and how to reduce your risk.

Privacy Act Notice

Section 6109 of the Internal Revenue Code requires you to provide your correct TIN to persons (including federal agencies) who are required to file information returns with the IRS to report interest, dividends, or certain other income paid to you; mortgage interest you paid; the acquisition or abandonment of secured property; the cancellation of debt; or contributions you made to an IRA, Archer MSA, or HSA. The person collecting this form uses the information on the form to file information returns with the IRS, reporting the above information. Routine uses of this information include giving it to the Department of Justice for civil and criminal litigation and to cities, states, the District of Columbia, and U.S. commonwealths and possessions for use in administering their laws. The information also may be disclosed to other countries under a treaty, to federal and state agencies to enforce civil and criminal laws, or to federal law enforcement and intelligence agencies to combat terrorism. You must provide your TIN whether or not you are required to file a tax return. Under section 3406, payers must generally withhold a percentage of taxable interest, dividend, and certain other payments to a payee who does not give a TIN to the payer. Certain penalties may also apply for providing false or fraudulent information.

Ohio Department of Job and Family Services

OHIO NEW HIRE REPORTING

Ohio Revised Code section 3121.89 to 3121.8910 requires all Ohio employers, both public and private, to report all contractors and newly hired employees to the state of Ohio within 20 days of the contract or hire date. Information about new hire reporting and online reporting is available on our website: **www.oh-newhire.com**

Send completed forms to:
Ohio New Hire Reporting Center
PO Box 15309
Columbus, OH 43215-0309
Fax: (614) 221-7088 or toll-free fax (888) 872-1611

To ensure the highest level of accuracy, please print neatly in capital letters and avoid contact with the edges of the boxes. The following will serve as an example:

A	B	C		1	2	3

EMPLOYER INFORMATION

Federal Employer ID Number (FEIN) *(Please use the same FEIN as the listed employee's quarterly wages will be reported under):*

Employer Name:

Employer Address *(Please indicate the address where the Income Withholding Orders should be sent).*

Employer City: Employer State: Zip Code (5 digit):

Employer Phone (optional): Extension: Employer Fax (optional):

Email:

EMPLOYEE OR CONTRACTOR INFORMATION

Social Security Number (SSN) (Check here if using FEIN for the Contractor)

State of Hire:

First Name: Middle Initial:

Last Name:

Address:

City: State: Zip Code (5 digit):

Date of Hire: Date of Birth: Is this a Contractor? Yes No

Date payments will begin for Contractor: Length of time the Contractor will be performing services: months

REPORTS WILL NOT BE PROCESSED IF REQUIRED INFORMATION IS MISSING

Questions? Call us at (614) 221-5330 or toll-free (888) 872-1490